Flying and floating cars with interactive global linear motors and thrust of Newton and Lorentz.

Flying and floating cars with interactive global linear motors and thrust of Newton and Lorentz.
(Twenty-sixth open letter to the International Court of Justice and the United Nations)
The identification of interactive principles based on the exploitation of the static pressure of the compressed air and the circulation of incompressible water eliminates the costs due to fuels, nuclear reactors, electrodes that are consumed, energy accumulators, energy distribution networks. Primary energy can be produced everywhere in the instant it serves in fixed and mobile plants without the need to carry out large hydroelectric works, thermal, nuclear, solar, wind power plants. Nothing can be cheaper, more efficient and cleaner than the simultaneous exploitation of the static pressure of compressed air, the circulation of water and the one-way flow, because water and air are not consumed and the energy produced is due. to the product of air pressure for the flow rate and density of water, which is a thousand times higher than a combustion gas. Today, these combustion gases are used all over the world but they are a stupid solution both from an environmental, technical and economic point of view, which devalues the value of the entire world science and the entire ruling class. The current patent laws are a scam or a huge international mistake against inventors unrelated to the centers of economic power that have produced global warming and immense public debt. The main architects of this scam or mistake are the United Nations, which regulates patent procedures, inventors’ rights and taxes to be paid through

WIPO. Therefore inventors who are not linked to the economic centers of power that are the main victims of this system, must describe these anomalies even when they file a patent, being excluded a priori from any advantages that the invention would produce by not being able to pay the required fees due to the power games made by those who manage economic power, who pretend not to understand the most innovative inventions, which would undermine their obsolete and polluting systems, which should not even be accepted by international legal bodies, if political power games and economics did not conceal sustainable inventions, impeding their experimentation, which cannot be done by small private inventors, devoid of any economic resource. The current laws, by not recognizing copyrights separate from industrial property, in fact, deny private inventors not tied to these powers the intellectual property which is recognized by all authors of intellectual works. In fact, only inventors are forced to pay the fees on patents granted even if they do not find lenders and only they are forced to spend money to make legal appeals against patents not granted by bureaucrats who do not have the requirements to scientifically judge the inventions that exceed the the current state of the art, above all, from a scientific point of view, using logical synergies between the scientific principles already legislated before the current industrial era by scientists such as Pascal, Bernoulli, Venturi, Torricelli, Henry, Newton, Maxwell, Lorentz, Einstein. Although these scientific principles have led to significant technological advances, they have not protected the environment, have not produced sustainable energy and have not been able to put together the push of Newton and Lorentz to conquer space, atmosphere and underwater environments. In fact, a lot of energy is needed to overcome gravitational forces and without identifying the interactive principles that make energy sustainable and clean, we have no hope of conquering space.

The narrow mindedness of lawmakers does not understand that if inventors turn into entrepreneurs to industrially produce a

single invention, they cannot study and publish inventions related to the scientific principles identified. If an invention is truly innovative, it produces many side effects and many applications. Only the inventor can see these applications in advance, having studied the topic differently from the existing systems. Obviously, if he becomes an entrepreneur with little money, he takes many years to make only the prototypes of a single invention and the state of the art cannot advance globally. Instead, the advancement of the state of the art must be global, even if only virtual, until the centers of world power admit their mistakes and really decide to finance interactive inventions, which compared to the current ones, have potential endless.

In fact, it is not enough to identify the correct scientific principles, it is also necessary to put them together correctly to prevent them from conflicting and optimize the yields in many applications simultaneously. These applications certainly cannot develop the inventor alone. For this reason, the United Nations and international judges should protect intellectual property instead of industrial property. In fact, the scientific principles well identified by pre-industrial scientists have never been coherently put together by modern scientists and inventors, dependent on public and multinational companies that still work in watertight compartments. With their silences, these are showing that they would not have identified the synergies identified by myself, even in hundreds of years. Not even the undersigned would have identified them, had he not left a large automotive multinational to work in a small company that installs public environmental and energy systems, where he works with a mentality opposite to that of large industry. Only as a pensioner did I decide to be an inventor to develop interactive systems, which as I have shown, would revolutionize both sectors from an energy and environmental point of view. However, I could not have proposed any solution without the important help received by the scientists of the past, mentioned above, who belong to the pre-industrial era

and modern electromagnetism. In fact, the current development model has produced not only global warming, but also nuclear, alluvial and immense economic disasters is due to the fact that fluid dynamics has stopped in the pre-industrial state, while all other sectors have advanced and have exploited modern advances due to electromagnetism and electronics. Instead, the undersigned, he realized that by re-evaluating the neglected fluid dynamics principles and coupling them with modern electromagnetism and the electronics of industrial processes, we can avoid thermal, nuclear processes and current hydroelectric systems that produce drought and floods. Therefore, interactive systems would render current large hydroelectric, thermal and nuclear works useless, also reducing the value of current renewable energies, which despite technological improvements, always have low yields, not being interactive but based on individual physical, thermal, chemical principles, electrolytic. The undersigned has already denounced these things to no avail for many years.
It was the end of the year 2018, I was writing another complaint article, when I realized that even the world transport system could undergo significant updates in addition to those already proposed by myself with the following articles
http://www.spawhe.eu/aerospatial-pressurized-hydroelectric-transport-system/,
http://www.spawhe.eu/hydroelectric-power-auto-with-torque-peripheral-to-the-wheels/, which can be read in PDF in English and Italian by clicking on the links mentioned Therefore, I interrupted the article I was writing and began to study the interactive solutions to put together the push of Newton and Lorentz in space and ground transport through collaboration between fluid dynamics and electromagnetics already cooperated very well in the cited patents, although world power centers have not appreciated them.
This presentation follows a few days that which accompanied the filing of a very important patent entitled “aerospace and submarine transport system with primary and induced

interactive global linear motors”, as flying and floating cars complete the use of global linear motors. interactive, which in the previous intellectual patent filing dealt with only large international, space and submarine means of transport. This patent deals with the lightest land transport of the future which should not pass through international airports and ports.

It is very strange that after filing the patent filing No. 102020000000031 on 03.01.2020, on the large means of transport of the future and I was going to develop to publish this solution, the Italian patent office anticipated me, proposing the update of the claims of patent filing No. 102016000087373 of 25/08/2016 entitled “hydroelectric car with peripheral drive torque at the wheels” which can be read on the web at the following address http://www.spawhe.eu/hydroelectric-power-auto-with-torque-peripheral-to-the-wheels /, while the compressed hydroelectric energy and the patents concerning it, mentioned above, have been declared “Perpetual motion” by the Italian and European patent offices, including the patent filing on a new way of flying based only on Newton’s thrust which can be downloaded in PDF in English and Italian http://www.spawhe.eu/aerospatial-pressurized-hydroelectric-transport-system/.

Paradoxically, after three years and three months from the patent filing, the Italian patent office asks me to update for the third time the claims of the filing entitled “hydroelectric car with peripheral drive torque at the wheels”. I should report the page and the lines from which I will extract the claims for the third time, so that they can easily evaluate the extent of the changes made to protect industrial property, which the undersigned will never be able to exercise, having no economic means and not even the age to turn into an entrepreneur. If I don’t change the claims according to their bureaucratic wishes, they refuse me the grant of the patent. How they refused me the grant of the Italian patent of the “pump with double separate feeding up to the impeller” which, despite the simplicity, is one of the

most important inventions of all time. Without this pump, it is not possible to create compressed hydroelectric energy that allows you to statically exploit the elastic pressure of the air by circulating water on the principle of impenetrability of the bodies. Therefore, without such a pump, sustainable primary energy cannot exist, which avoids thermal and nuclear processes. This energy is not consumed, it only wears the materials that make up the systems. For this reason it is the only one that can power the electromagnetism of the current generators, which power the electric motors, which make the pumps turn, the turbofans that produce Newton's thrust, and move the permanent magnets that produce other induced currents that they produce the Lorentz thrust which adds up to that of Newton.

In other words, world science has not had the opportunity to realize that Newton and Lorentz's thrust to overcome the gravitational force can be added because no world industrialist wanted to modify the pumps, no world scientist has supported this invention. The international patent of the undersigned has lapsed because the undersigned has not paid the maintenance fees of the international patent. But what is worse is the fact that the Italian patent office, instead of supporting an Italian invention that with great effort had conquered the title of international patent, also undergoing the payment of international filing fees (about 3500 euros), said independently, that the pump with the double separate power supply up to the impeller is not an industrial invention, but a simple utility model. I refused the utility model title and continued to believe in this invention, producing other inventions with the same system, but not spending money on legal appeals or obtaining new international patents, having understood that the world public ruling class, including that scientific, reads a script already written on environmental matters. He denounces the problems, but does not find the solutions, despite the funding for public research. With their own silences, together with those of the multinationals, they hinder the financing of sustainable and

interactive inventions without anyone world statesman noticing anything. Is all this ever possible?
I will try to satisfy the bureaucratic request of the Italian patent office to update the claims of the hydroelectric car to receive the patent. But it is difficult to satisfy them, since they are mainly interested in the formal aspect. Not how it works and what side effects it produces. Probably, they did not realize that the hydroelectric car cannot operate without the pump with the separate dual power supply up to the impeller, which they have declared a utility model. How can a utility model circulate a car at a speed of 150 km / h without fuel? What are the claims if they don’t understand how the car works? The compressed hydroelectric engine virtually mounted on the hydroelectric car begins another era of world transport, it will undergo many changes and many updates, as thermal and electric motors have undergone in one hundred years of industrial history. But the operating principle is fundamental and distinguishes the difference between an intellectual patent that begins a new era of development and industrial patents that develop and update details. However, for world legislators, intellectual patents have no right if the inventor is poor and cannot pay unfair taxes which on public utility patents should not even be paid.
In this ambiguous international context regarding patents and industrial and intellectual property, the undersigned has realized that the compressed hydroelectric engine conceived to enter the hood of a car and make it walk on the earth, cannot be useful to make it fly in the atmosphere even if the energy principle is valid as a primary source of electricity. Therefore, it has changed the shape and substance of the compressed hydroelectric motor making it also inducer of a magnetic flux so that it can produce the induced currents that produce the Lorentz thrust. He also realized that the solutions to make cars fly must be different from those that make the planes and spaceships of the future fly, but the best primary energy will always be compressed hydroelectric. Hence, the undersigned developed two new intellectual patents. This

does not prevent multinationals from developing new industrial patent patents if they also recognize copyrights to intellectually conceived systems. Personally, I don't see any contrast between industrial and intellectual property because cars and planes in over one hundred years of history have not been able to eliminate fuels and have not been able to add to Lorentz's thrust to Newton's thrust that it is indispensable for navigating in space but also to help Newton's thrust to overcome the Earth's gravitational force.

Today, almost all of the inventors are employees of public and private companies. As world governments have stopped making entrepreneurs, public inventors are also working to sell patents to multinationals, so no one develops global and interactive projects of general interest. According to the situation of world development in such conditions, all power centers, public and private, pretend not to understand interactive inventions, while paradoxical situations occur such as the case of hydroelectric cars which, after three years and three months from the deposit of patent, the Italian office is still examining hydroelectric cars, but only from a formal point of view. These cars, however, even if they have never been realized, from an intellectual point of view, were the first step in the revolution of the world's aerospace and transport through the "flying and floating cars with interactive global engines and thrust of Newton and Lorentz", of which I speak in this new patent filing. This shows that it is necessary to contest the entire system of international patents, for the simple fact that at least a part of the world inventors must be independent of the centers of power that have already made development choices and prevent the emergence of alternative solutions. Only by examining the real paradoxical situations that the current system produces can we understand that this system has never worked. Here are some examples:

1) The facts have shown that the world authorities and multinationals did not like the invention called "hydroelectric car with peripheral drive torque at the wheels"

despite the fact that no car exists on planet Earth that works with a hydroelectric engine and with the applied drive torque on the periphery of the wheels. Only these two facts demonstrate that the invention has the requirements of inventive originality and industrial applicability regardless of how the claims are written. The claims are a formal requirement that could damage the inventor's industrial property rights, not intellectual property, because hydroelectric cars do not exist, but intellectual property and copyrights do not exist, if the inventor does not find lenders and does not pays the patent maintenance fees.

2) Receiving the title of an industrial patent after four years from the patent filing and continuing not to find public and private financiers, for an inventor it is more of a damage than a benefit, having to start paying also the maintenance fees of the patent even if he doesn't have the means to be an entrepreneur. The undersigned has obtained fifteen national patents on topics of public utility, five of which transformed into international patents and one European, paying the filing fees unnecessarily and in some cases also the maintenance fees without finding interlocutors. Do not say that it is the laws of the market that rule. Because the market is distorted by the same international laws, which by not prohibiting the production of polluting energies, and by not requiring by law the producers of means of transport to close the cycles that open organic and inorganic, have allowed the multinationals of transport not to take considering the invention of the undersigned. These will continue to disregard my invention and I, as a mere retiree, would needlessly pay maintenance fees to maintain my rights. All of this is absurd and shameful on the part of international legal entities. Above all, since they are inventions of public utility.

3) The trade in patents between public and private bodies, allowed by world legislators, has created a web of interests between public researchers who sell and private companies who buy which also prevents us from talking about the alternative solutions proposed by the excluded. The public inventors to

sell patents to multinationals did not produce any global invention, which were developed only virtually without any funding and published on the website http://www.spawhe.eu. Even in the international conferences organized by the United Nations, COP, which should remedy the scientific and regulatory shortcomings of individual countries, there has never been talk of interactive energies and purification. How can private inventors bear the brunt of their research and maintain rights over their patents?

4) Private inventors can only defend themselves by fighting for the recognition of copyright and the intellectual property of inventions, which are recognized to all authors of intellectual works, but not to inventors who cannot find financiers, who are those who are not tied to power centers that deal with environmental and energy problems. The other public inventors are saved by selling partial and commercial patents affecting multinationals. Multinational corporations will never buy inventions which prove that their inventions are environmentally and economically wrong. Governments continue to fund research to investigate the seriousness of the problems, but do not experiment with the interactive solutions proposed by the few independent inventors so as not to antagonize the multinational that buy their patents and threaten layoffs if they lose market share.

Believing that I have finished my inventor activity, although I will continue to write some articles, I hope to be able to be a full-time grandfather and enjoy my six grandchildren, hoping that others will come. Life must continue and possibly become much longer than the current one, also thanks to robotics, cybernetics, but above all, the artificial heart oxygenator of the blood, which is an interactive mini global engine, considered “perpetual motion” by the Italian patent office, http://www.spawhe.eu/cuore-artificiale-ossigenatore-del-sangue-autonomo-energeticamente/http://www.spawhe.eu/artificial-heart-oxygenator-of-blood-energyically-autonomous/ without the ministers of

labor, economic development, the environment, and the governments of the past fifteen years have never defended or experienced one of the inventions of the undersigned, which until proven otherwise, are Italian inventions. This explains why this country that gave birth to the best inventors in the world is today the European tail light in terms of growth.
An invention not financed and not made by entrepreneurs and world governments is like a book written but not published by publishers. Therefore, an unread book is always new and when publishers decide to publish it, they cannot deny the writer's rights. This concept only patent lawmakers do not understand. Who do these legislators work for? Who do they obey?
I think that governments should be grateful for the birth of SPAWHE's interactive systems because having created an intertwining of too strong economic interests with multinationals, they have lost the ability to govern and plan global sustainable development. These interests would not have led to these solutions even in thousands of years, destroying the planet, even if the multinationals improve the performance of the machines. SPAWHE replaced the world public science that worked to sell its patents to multinationals, having virtually modified the chimneys, made the sewers purifying, created the limestone greenhouses, the superimposed biological ponds, the artificial welling, the submerged hydroelectric energy, the pumps with the dual power supply shot up to the impeller, the hydroelectric energy with the recycling of the water in an open vessel, the ion exchange desalination that produces energy instead of consuming it, the hydroelectric current generators, the hydroelectric car, the submerged hydroelectric energy in basins and wells that purifies the waters, the human autonomous energy heart that energetically purifies the blood for Henry's principle, finally, the hydroelectric car and the aerospace land transport vehicles that would not consume fuels, the interactive global engines that they would realize together Newton and Lorentz's thrust to navigate the atmosphere, space, and under the sea. All these inventions were not made not because they are contrary to the principles

of energy conservation, but because they reveal the inability of public and private science to make interactive and global scientific and technological reasoning, which are the only ones that can allow the real progress. These are the reasons why global warming cannot be fought and at the same time nobody has put together a clean rational system that produces the thrust of Newton and Lorentz on board the means of transport. These thrusts must be based on a primary source of clean and powerful sustainable energy that is derived directly from the terrestrial effects of gravitational force, as the undersigned has shown.

I confirm that I am against the current industrial patent system, but probably this system can only be defeated by itself. As it allowed to develop a polluting, inefficient, uneconomical and corrupt global system. At the beginning of 2020, I filed these two important intellectual patent filings on land and sea aerospace transport. World authorities have almost a year to decide whether to continue protecting industrial property, or to demonstrate greater democracy and farsightedness by granting intellectual property and international copyrights to inventors and access to the making of inventions to all public companies and private interested. Obviously by regulating taxes differently and by demanding inventors the taxes on the rights actually received, not the maintenance fees of the patents that have never found financiers, because governments allow to build and sell fixed and mobile systems that do not close the cycles that open.

Since the current laws allow only one year to transform a national patent into an international one, the undersigned, right now, asks the few people in the world, who believe in interactive energies, to raise funds internationally, so that all the inventions of the undersigned , presented on the website http://www.spawhe.eu, which are now nobody’s, since nobody has financed and implemented them, including the most recent ones, are considered to be the industrial property of an international joint-stock company, which will call “SPAWHE SPA” If this proposal of mine finds enough consensus to be

implemented, it will replace the undersigned legally on all the rights acquired on the patents still in existence and on the expired ones that could be renewed and reported internationally, respecting the existing rules. Personally, as an inventor, I will not claim positions in this company and I will not be a shareholder, having no money to invest. If this initiative is successful, and my inventions will work and produce profits, I will be given royalties that will replace copyright.

I think this solution is not a good solution, because no multinational company, no matter how powerful it may be, can supply interactive energy and purification requirements all over the world, with about forty patents filed. But it will have the advantage of breaking the state of inertia of the United Nations, governments, multinationals and even environmental associations that protest but do not propose solutions. Today those who protest, without engaging in alternative designs, only ask for more funding in favor of those who have already produced global warming without identifying the interactive energies that would protect the environment, which also include the fuel-free terrestrial and aerospace transport systems published since 2016 and updated with these last two patent filings of 2020.

What will happen to the funds raised by SPAWHE S.P.A. if the United Nations, through W.I.P.O. (world intellectual property organization), reform their unfair system, separating intellectual property from industrial property at least for patents of public social utility (energy, purification, health)?

I don’t think this will happen, since the United Nations and the international judges have never responded to twenty-five open letters from the undersigned, also sent to their public addresses. However, I think that SPAWHE S. P. A. can be achieved equally, with different objectives, equally important.

In fact, if the United Nations recognized the copyrights of inventors who produce inventions of public utility, the

experimenters of such inventions would also be lacking in the world, since public bodies have shown not to collaborate with private inventors, preferring to collaborate only with multinationals who buy their patents. SPAWHE S.P. A. could become a private company that makes prototypes of inventors that are not financed by public bodies and multinationals, sharing 50% of their copyright or industrial property rights with the inventors, in the case of the sale of patents. I would be the first client of SPAWHE S.P.A. because I'm sure that even with the recognition of copyright to inventors, multinationals and public bodies will continue not to collaborate, having too many interests in common on current non-interactive inventions

Few people know that the inventors of public and multinational corporations already own the rights to share industrial property (not intellectual property). But only public bodies sell patents, while multinationals buy. In fact, when a public body sells a patent to a multinational company, the proceeds are divided by law to 50% between the inventors and the organization they belong to. The undersigned is also invited to international conferences as a speaker to illustrate his inventions, and being his inventions transversal to different sectors, he is invited to conferences on recycling, purification, renewable energy, medicine, agriculture, chemistry, the biology, transport, but does not participate in having to pay the living and travel expenses alone. While taxpayers pay these expenses to public inventors, they also pay wages to produce inventions useful to humanity and the environment. Not simply inventions useful to multinationals that want to replace heat engines very slowly with battery-powered cars which are another palliative compared to interactive energy which needs neither fuels nor batteries, because energy can be produced in any corner of the Earth and space at the same instant it serves Until now, my invention most requested by the organizers of the congresses has been "the artificial heart oxygenator of the blood", which has been considered perpetual motion by the Italian patent office.

However, even this invention has not found financiers, because multinationals do not make inventions that go against their commercial interests regardless of the existence of a patent. They probably prefer to sell pacemakers, as other multinationals prefer to sell oil, others the current pumps, petrol or battery cars, others the current planes, the current boats and ships with heat engines, the current agricultural tractors. It is possible that statesmen and public legislators, including those of patents, which depend directly on the United Nations, together with international judges, do not realize that with their laws, which protect the industrial property and trade of public patents towards multinationals, do they stimulate opposing interests to those of a sustainable economy?

These internationally legalized conflicts of interest cannot be fought unless interactive and transparent inventions and companies such as SPAWHE S.P.A. that finance the demonstration prototypes, which the public bodies, not doing their duty, ignore with the consent of the governments. What are the current rating agencies for, which give negative scores to indebted and inefficient countries? These are private companies that only protect capitalism and world stock exchanges. They have not noticed that since the beginning of the industrial era we have mistaken the primary energy and purification sources and for the same reason world science has not been able to add the Lorentz’s thrust to Newton’s to conquer space.

It should be remembered that the abbreviation SPAWHE, coined by myself in 2014, means Synergic Plants, Artificial Welling, Hydroelectric Energy, today it should be extended by including the inventions developed and published after 2014, but the word Synergic already indicates the exploitation of interactive systems that world public and private science has underestimated. I cannot modify all the written and published articles bearing this abbreviation, nor can I specify that the word hydroelectric refers to compressed hydroelectric with the recycling of water which has nothing to do with current

hydroelectric power plants which, like the thermal and nuclear energy, they only produced disasters.
I think my inventor activity ended with these latest inventions. I also think that they are not all flour of my sack and that the study of these solutions has strengthened my faith in a superior entity that governs the world. The world is so perfect that none of our inventions can improve it. I believe that the task of the inventors enlightened by this faith in a higher entity is to correct all the wrong inventions of the past that do not close the cycles they open. By doing this work, inspired by natural systems and the laws of physics, I produced the sequence of protective inventions of the environment, which gradually allowed to bring together the thrusts of Newton and Lorentz, which not even NASA, dominated by thermal scientists and Nuclear has never managed to put together. My inventions are not only mine but also of the scientists of the past who have separately experimented very important laws, especially physical, on water, air, gravitational force, electromagnetism, which I was able to put together without funding, because the experiments have already made them. Physics does not need chemistry, thermodynamics and nuclear power to produce energy.
I have always said that I am a simple designer and installer of industrial and environmental systems. I only did the design work with the few means that allowed me my modest pension. I cannot also proceed with the installation of the systems, above all, due to the absence of institutional customers, especially regarding public utility systems. There was no point in participating in 2015 and 2018 in European social competitions because environmental and energy problems were not considered social by the examining boards. These competitions are authentic sweepstakes lottery (http://www.spawhe.eu/the-european-social-innovation-competition-lottery/)
This is the summary of the latest invention that I propose.
The Italian patent filing no. 102020000000031 of 03/01/2020, entitled “aerospace and submarine transport system with

primary and induced interactive global linear motors”, although it is only an intellectual patent, allows us to touch first hand a very important advancement of the state of the art in systems of transport worldwide, as hydroelectric motors, also intellectual patents, have turned into linear motors, changing the shape and also the substance. In fact, the shape of these motors has become elongated cylindrical by incorporating the high pressure tank into the low pressure one, while the external walls of this have become sliding tracks of the permanent magnets, which are used to develop the induced currents. Therefore, an external solenoid was also added to the low pressure tank, so that this solenoid can also produce the Lorentz thrust. The aforementioned patent dealt with large aerospace means of transport, while in this the undersigned deals with small means of transport. Looking at figures 5, 6, 7 of a car of the future which represent the longitudinal and transverse sections, we can see that under the passenger compartment floor was installed in series with the interactive global linear motor and an electric turbofan, also equipped externally with sliding tracks and solenoid. Therefore, this group will simultaneously produce the thrust of Newton and Lorentz. In addition, it will be pivoted in the center and can tilt about 20 degrees. The four-wheel drive of the car, equipped with driving torque applied to the periphery of the wheel rims, will allow land transport, but they will be used above all to get the vehicles off the ground, which obviously, with the thrusts of Newton and Lorentz, will be able to rise from the common urban roads and fly into the atmosphere without using fuels. The overall thrust that will make the cars move in the Earth’s atmosphere and in space will be due to the result of the horizontal and inclined one of Newton and Lorentz produced by the thrust group placed under the floor and by the vertical one of Lorentz, produced by the group placed at the interior of the passenger compartment. The plan size of the cars of the future will be the same as the current one but the shape will resemble the current minibuses, developing in height. To climb on them we will have to climb

some steps. These cars, by changing the wheels, will also be able to work the land, being much more powerful than current agricultural tractors, thanks to the interactive energy between water, air and electromagnetism, which costs nothing. Obviously, if we use cars as agricultural tractors we will have to disable Newton’s thrust which would raise too much dust. These cars will deactivate Newton’s thrust and reinforce Lorentz’s, even when used by the firefighters to stop permanently on fire outbreaks, transporting tanks full of water but externally equipped with permanent magnets and a solenoid that will produce the vertical thrust of Lorentz, to cancel the weight, balancing the weight force which is equal to “m x a” with the opposite force equal to “m x aL”. The cars of the future can also be used to enjoy the sea and fish, quickly escaping the rough sea. Obviously, as for working the land, putting out fires, an accessory application will be needed. In fact, they can inflate two air cushions in flight on which they will rest on the water of the seas and lakes. These air cushions will serve to slide the car over the water and make it take off with the push of Newton and Lorentz. In flight, the cushions will deflate and roll up automatically in two special containers placed laterally to the global linear motor placed under the floor of the passenger compartment. Current cars are a waste of fuels and technologies that will never lead us to these interactive solutions because having the wrong primary source of energy, they cannot overcome the current state of the art. Only by demonstrating the technical and economic inefficiency of today’s world energy systems, including batteries, will the current multinationals that govern and pollute the world be scrapped. But it is necessary that the oppositions also begin to understand interactive systems and so far, they have not understood them because those who govern and those who oppose attend the same schools of scientific training. They only diverge on political and social issues, while the problem is above all, scientific.

DESCRIZIONE

Before starting the description of this patent filing, I

consider the following premise necessary: “Nature, by thickening the atmospheric air, has given us the tool to slow down the fall of bodies and to counteract and overcome it if we want to overcome the gravitational force, allowing us to produce the compressed hydroelectric primary energy that directly produces the drive torque at the output of a turbine connected to a current generator that produces direct electromagnetic current, which produces Newton’s thrust by means of propellers and fans and the inductive and induced Lorentz one by means of permanent magnets and solenoids. The most difficult energy to discover was the primary one with the recycling of water, which also allows the best energy gain thanks to the Pascal principle which states that the pressure of a compressed gas (air) expands in all directions and therefore if it cannot expand it exerts static pressure on the surface of the liquid (Water), referring to the Torricelli principle which states that the velocity “v” of water leaving a hole subjected to pressure “h” is equal to the square root of 2gh, where g is l ‘gravity acceleration. This is the speed of the water that passes through the turbine and moves the shaft of the current generator. However, the invention that was missing to exploit the same amount of water indefinitely, and to allow energy and purification gains was “the pump with the double separate supply up to the impeller”. In fact, this pump, having two clearly separate supplies that meet only in the rotating impeller (not before) allows to insert the water discharged by the turbine directly into the internal recycling circuit of the autoclave without having to overcome the opposition of the static pressure. But the same amount of water that enters low pressure is simultaneously expelled at the same time by the pressure “h” of the autoclave which makes it enter again into the hole that feeds the turbine with the Torricelli speed, due to Pascal’s principle or impenetrability of bodies. This allows an immense energy gain, which does not require fuels, electrolytic materials or active radios. It only depends on the pressure and wear of the materials that make up the pump, the turbine, the turbofans that produce

Newton’s thrust and the mechanical motion transmission organs to the wheels or marine propellers and to the permanent magnets that produce the induced currents, which they produce the Lorentz thrusts. To this we must add that every time the water that produces the energy passes through the autoclave it absorbs a greater quantity of oxygen according to the laws of Henry and Dalton, therefore these systems can also be used as purifiers of polluted water. It is no coincidence that the degree of water pollution is measured in BOD which means the need for dissolved oxygen. Isn’t it ridiculous that we consume a lot of energy today to oxygenate the water, while the oxygenation of the water could be a secondary effect of energy production? Who should answer for these worldwide mistakes? Certainly not the patent offices that have declared the energy systems proposed by the undersigned “perpetual motion” and utility model the pump with the double separate power supply up to the impeller. In my opinion, public and private world science must respond. For a matter of intellectual honesty, otherwise the legislators will continue to believe indefinitely in the fable of “perpetual motion” that does not exist, but if it existed, it could not compete with interactive energy, which does not exist only because of the inability of science public and private, which together have not been able to extract it from nature “.
To purify the environment it is essential to identify the interactive principles between water and air. It also serves to design a rational terrestrial and spatial transport system. In fact, gravity and atmospheric pressure hinder the lifting and movement of the masses. The thrusts of Newton and Lorentz have been legislated for centuries, but in air transport only the first are used because of the difficulties encountered by science in inventing a space-saving system that produces sufficient electricity on board the means of transport to feed both thrusts, which together, with their accelerations, would zero the weight of the mass, which is a vectorial force, according to the relation F = m * (a – aL – aN), where “aN” and “aL” are the respective accelerations of Newton and Lorenz

in the opposite direction to gravity. This problem was solved with the invention of the “primary and induced global interactive linear motor”, which is a complete system, which exploits air pressure statically, one-way, circulates pressurized water through a turbine with current generator and uses a pump with the separate double supply up to the impeller, which recycles the water discharged from the turbine by inserting it again into the internal recycling circuit of a pressurized autoclave in the form of a tube, placed in series or in parallel to an electric turbofan, while the primary electric current produced by the generator feeds the turbofan motor and moves the permanent magnets of two parallel or superimposed inductor circuits, concentric to the autoclave and to the turbofan, induced currents are also produced in the external enclosures of the autoclave and turbofan they generate two Lorentz thrusts which add up to the Newton thrust of the turbofan. Therefore, the electric turbofan becomes an induced interactive linear motor that simultaneously produces the thrust of Newton and Lorentz, while the primary plant, in addition to feeding the inductor circuits, produces in its own armature the Lorentz thrust which is added to the two thrusts of the turbofan.

Since described in the summary, in the near future, the simplest and most economical way to produce energy, purification, and above all, to move on the earth, in space and in submarine environment will be with the “primary linear and induced interactive linear engines”. This is the name I gave to these complete energy and collateral depurative systems, autonomously energetic, that do not require public infrastructures such as roads, bridges, viaducts, tunnels, railways, subways, energy distribution networks. i don’t think it’s a coincidence that Newton’s thrust opposes the flow of air that enters the turbofan and that it goes in the same direction as the Lorentz force, if the flow of the permanent magnets that we use to produce the induced current, goes into the same direction as the air passing through the turbofan. In fact, even the electromagnetic force of Lorentz is opposed to

the magnetic flux that generates it. On the other hand, these laws have been widely tested even if no one has thought of sliding permanent magnets outside the turbofans and creating the air gap and an induced outside solenoid. And to do the same thing even outside the primary circuit producing compressed hydroelectric energy and the compressed air and water tanks that feed it and that recover water and air in an infinite recycling cycle that does not it leaves nothing out of primary energy sources. More than a hundred years after the important discoveries of electromagnetism, it can be said that apart from the Maglev high-speed trains that use them only partially, there are no practical applications of linear motors, which instead have great potential if they are used in conjunction with production of primary compressed hydroelectric mobile energy and to the cylindrical surfaces of electric tanks and turbofans.
World science on planet Earth has made the mistake of not properly investigating and exploiting the energy present in the environment produced by gravity, which has thickened the air to allow us to statically exploit the atmospheric pressure. On the other hand, nature uses the simple atmospheric pressure on the water to produce sea currents, artesian wells, rivers, waterfalls, teaching us that it is convenient to use the force of the water under the pressure of the air which can act even statically, taking advantage of its own elasticity. World science has not perfected this system technologically with new and simple inventions. The undersigned did this by first inventing the “artificial welling” (patent filing 102014902290390 of 09/03/2014) and then “submerged hydroelectric energy” (Italian patent filing 102014902298581 of 06/10/2014) and subsequently, ” the pumps with the separate double supply up to the impeller “(Italian patent filing 102015000048796 dated 07/09/2015) which would allow to exploit the compressed air pressures in the autoclaves to produce fixed and mobile electromagnetic energy. An invention is considered as such when it has the requirements of novelty, inventiveness and industrial

applicability. Above all, it must not be easily understood by the experts. Obviously, if the experts do not understand them or pretend not to understand them in order not to scrap the previous inventions, they do not even include the patent offices, which very quickly declare that they are contrary to the principles of energy conservation. The current system of managing and granting patents, above all, of public, utility is obsolete and against the interests of the environment and the world population.

Very strangely, the only energy that has never been produced on planet Earth are the submerged and compressed hydroelectric ones, which would dissolve oxygen in the water on Henry's principle. These energies do not consume and do not transform primary sources (water and air), they only wear materials that can be regenerated with fusions and mechanical processing. The primary hydroelectric energy compressed with water recycling, mounted on the means of transport, through the current generators can produce both the reaction thrust and the electromagnetic thrust without any counter environmental indication. Today, it should be considered a fortune that the undersigned, has already proposed a sustainable aerial and space navigation system, based on Newtonian thrust, through the realization of thrust tunnel with electric fans and turbo compressed air injections. From this system it was natural to add the electromagnetic thrust to be used above all in the vacuum to the electric Newtonian thrust tunnels. But, as anticipated in the summary, it is clear that the electromagnetic thrust can also be used in the atmospheric environment, if the way of flying is changed, creating a unique air navigation system that is both terrestrial and spatial. This system would not only not pollute the environment, but would also be cheaper and safer than current aircraft that use fuels and aerodynamic principles to float in the atmosphere. In fact, if the primary energy becomes the compressed air exploited statically and the principle of impenetrability of the bodies, the energy vector will be the simple incompressible water that has a density about 1000

times higher than a combustion gas. It means that for the same flow rate and pressure on the means of transport we will produce 1000 times more power than that produced with fossil and chemical fuels, with the same flow rate as the carrier fluid, in addition by recovering it and inserting it back into the energy circuit. In fact, scientists should know that power does not produce heat, but the flow rate for pressure for the density of the fluid circulating in the turbine.

What scientists today still do not understand are that they focus only on mathematical expressions and not on the practical aspects, is the fact that the power of the centrifugal pumps can be modified to recover the water that produced the energy and insert it back into the pressurized recycling circuit, exploiting the depression that the centrifugal pump produces in the center of the impeller. It does not matter that the recycling pump must circulate in the pressurized autoclave tank a much higher quantity of water since this circulation absorbs very little energy, being the circuit very short, moreover, working with balanced pressures on suction and delivery the pump absorbs energy of a closed circuit, even if a branch of the circuit is open to relieve the pressure at the turbine outlet. What is important is the fact that the water inserted more into the impeller than the volumetric capacity of the circuit is immediately expelled from the static pressure of the autoclave due to the principle of impenetrability of the bodies. This expulsion done at high pressure does not cost energy, as it is produced by the elasticity of the air, in a one-way water circuit, which first passes through the turbine, then a tank at atmospheric pressure and returns through the second supply of the pump back into the pressurized autoclave (2). This circuit produces the best possible primary energy on planet earth, we can also bring it to space because it does not consume water and also recovers the air that comes out of the tank vent at atmospheric pressure (1), as seen in Fig. 2In this circuit the main supply of the pump continues to recycle its pressurized flow rate with the same direction of flow, without varying the

volume and pressure of the air cushion of the tank (2) (checking the revolutions of the circulation pump and the autoclave level probes). We know that due to the principle of impenetrability of bodies, water would not have entered the pressurized circuit of the autoclave (2) if the outlet that powers the turbine (3) had not been opened at the same time, but we also know that if it did not exist the depression in the center of the centrifugal impeller of the pump (6), and that if the two inlet streams were not clearly separated until the impeller inlet, the system would not work as well.
However, having specifically created these three conditions (ignored by science, by the manufacturers of pumps and turbines) in the design and patent filing phase, there is no doubt about the operation of this system that produces free electromagnetic energy through the coupled current generator to the turbine, using the one-way principle of the impenetrability of bodies, but also those of Pascal and Torricelli lead to the same conclusions. Why are the scientists of world physics silent by continuing to insist only on thermal and nuclear energy? Science must above all be transversal and take advantage of the opportunities that technology and research also offer by expanding the functions of man-made plants.
Today, thanks to the revolutionary ability of the diodes and power thyristors to make the voltage and frequency of the power supply line independent of those that power the motors, it has made it possible to use three-phase asynchronous motors powered no longer at fixed voltages and frequencies but finely variable so as to accurately adjust torque and speed. Therefore, by feeding a pump with variable revolutions with separate double feeds up to the impeller, which is the heart of a very complex system that I called “interactive global linear motor”, all the connected electric motors are automatically adjusted simultaneously and therefore also the induced currents and consequently also the thrusts of Newton and Lorentz.
Today, we no longer need the electricity distribution network

and heavy power transformers. It is worth noting that the asynchronous motors can be powered with a symmetric polyphase system at any voltage, and can also be used as current generators if coupled directly to the pumps used as hydraulic turbines, as provided by myself in the submerged electricity production and compressed. Today, a three-phase motor, built in large series, can have powers ranging from hundredths to a few tens of thousands of kilowatts. The frequency and speed of rotation is practically constant as the speed difference, from empty to full load, generally does not exceed 4%. Having a reversible operation, like all electric machines, it can also function as a generator, and also as a brake in the landing maneuvers of the planes of the future.

In modern physics, the resistance that the body opposes to all the variations of its state of quiet and motion is defined as mass.

The word mass indicates a property of bodies, it is commonly associated with the meaning of quantity of matter. Weight is instead a force. A body, if it is not subjected to forces, maintains its state of motion, that is, if it is in motion, it continues to move with the same speed and in the same direction, if it is stationary it remains stationary. To change the state of motion of a body we must therefore exert a force on it. The mass of a body can be defined as the “reaction” that a body opposes to the action of a force. It is precisely the inertial mass m that appears in Newton’s famous formula F = ma. F indicates the most generic of the forces, and “a” is the acceleration (speed change), which produces the force on a body, not bound, inertial mass “m”. With the same force, the greater the inertial mass of the body, the smaller the acceleration. That is, the greater the inertial mass of a body is more difficult to change the state of motion. The greater the inertial mass of a body, the greater the force applied to put it into motion or change its speed and direction of motion must be.

But as legislated by Newton himself, all material bodies attract each other. This attractive force is the force of

gravity (gravitational attraction), and is proportional to the product of the gravitational masses of the attracting bodies. Considering that on planet Earth the main mass is that of planet Earth, the force of attraction suffered by all terrestrial bodies has been called weight force. The objective of this patent filing is to overcome the weight force of the bodies by producing energy internally within the bodies themselves, exploiting all the known energy principles and adding them to act in the direction of motion.

The undersigned, with the invention of compressed hydroelectric energy, which is based on the one-way circulation of incompressible water, the exploitation of the static pressure of compressed air and the principle of impenetrability of bodies, has identified the terrestrial application perfect of the principle of conservation of the masses, which does not destroy or transform matter. It only borrows it and returns it with the same chemical composition because clean water cannot absorb more gas than those already dissolved in it, according to the laws of Henry and Dalton.

Who provides the energy in this system is the flexibility of the air trapped in a small volume that can only expel the incompressible water, which is forced to pass through a turbine and return to its initial state. In fact, the water introduced in low pressure through a pump equipped with a second separate supply that reaches until to the rotating impeller, the volume V of the material does not change. The mass is not created or destroyed, but as it passes through the turbine connected to the current generator, it transforms the pressure energy into electricity. In fact, the pump motor, working with balanced suction and delivery pressures on one of the two feeds, works with a very low head, and a very low absorbed power. In fact, it allows the multiplication of the energy contained in the mass that passes through the pressurized autoclave. Electricity, transported in electric cables, can be used in a different place from where it was produced, for industrial, civil uses, or it can be used to move the same means of land, sea and air transport using the

principle of Newton’s or Lorentz’s reaction (as happens in Maglev levitation trains).
Today, there is no energetically autonomous electromagnetic mobile technological mass, but all the ingredients to achieve it exist, since the electromagnetic principles that lead to the thrust of Henrik Antoon Lorentz have been identified and developed. Only the primary source of non-exhaustible powerful energy was missing (hydroelectric compressed with the recycling of water), already identified by the undersigned and already applied virtually, in terrestrial applications. Unfortunately you don’t realize.
It is obvious that changing the way of producing energy changes the entire world development model and requires a different scientific organization of work in all currently developed systems. Having undersigned already written abundantly about the changes to be made in energy and purification systems, including land transport, he finally addresses the most complex aspect which is that of the future way of navigating in the atmosphere and in space. Even these already partially developed but only with Newton’s thrust. In fact, in these two environments we can no longer rely on aerodynamics, studied since Leonardo da Vinci times. We must rely on the management of the physical and electromagnetic forces produced by man and of the existing natural ones which oppose or facilitate the movement of bodies.
The state of the art cannot advance quickly and efficiently and sustainably in this sector, which draws energy systems only from thermodynamics and nuclear power. Without compressed fluid dynamics, the solution to produce electricity on board the aircraft and to replace turbofans powered by combustion gases with electric ones could not have been conceived. Nor could this update of the state of the art be conceived, which creates the Lorentz thrust on the external wall of the turbofans and fluid-dynamic systems that produce primary energy without fuels, like the previous version, but modified in shape to make them more suitable. In fact, the undersigned, continuing to develop his inventions virtually, believes that

for air and space transport, the best solution is to superimpose electric turbofans on compressed hydroelectric plants developed linearly in an elongated cylindrical shape, and to use the external walls of the two systems as sliding tracks of the permanent magnets, which serve to develop the induced currents, also adding the external solenoids. In essence, these systems are “interactive linear global motors” that produce together with primary energy also the electromagnetic thrust of Lorentz, which adds up to that of Newton’s reaction of the turbofans, also modified, so that they produce the double thrust, as it can be seen from the section drawings of figures 1 to 7, where the thrusts of Newton and Lorenz are indicated respectively with the abbreviations FN and FLwhile the driving force due to the wheels touching the ground is indicated by FM.
In the system in question, both the thrust of Newton and that of Lorentz, that the driving force to the wheels depend on the small energy that the pump consumes with the double separate power supply up to the impeller that keeps the whole system in operation, operating all the time , recovering the mass of water discharged from the turbine at atmospheric pressure, recycling it and inserting it back into the pressurized tank that feeds the same turbine. This circuit consumes energy as a closed hydraulic circuit but produces energy as an open hydroelectric circuit (moreover pressurized for free by compressed air, which is exploited statically, without the expansion and compression of heat engines that waste energy and pollute the environment). The higher the pressure we will develop in the autoclaves built into the aircraft, the greater the driving forces on the wheels, the newton’s and the induced currents that will produce the Lorentz thrusts.
If we think that the pressures produced in the current combustion chambers of thermal engines and turbofans, at most they can reach the pressure of forty bar with the density of the combustion gases about a thousand times lower than the water that would circulate in cold and with very static pressures. higher, we can only imagine the power that we could

develop with the “primary and induced interactive global linear motors” in fact, the water is incompressible and the compressed air can also be compressed at thousands of bars. We need to find materials that can withstand these pressures, but even with existing materials we can take advantage of pressures higher than those produced by turbofans that use combustion gases, without polluting and without paying for fuels.

Working in watertight compartments, the state of the art is progressing very slowly, hampered, above all, by those who have invested in partial inventions and by the legislators and governments that have allowed it. Today, these interactive inventions are also hampered by the conflicts of interest created by the sale of patents by public researchers to private industries, which also involve world legislators and national and international judges, which should condemn governments and the huge crimes of omission that are committed Instead, the crime of omission has become the daily bread of the entire world ruling class. Today inventions are widespread for a fee by scientific editions and congress organizers, while patent deposits have to pay filing and maintenance fees in all countries of the world even if they do not find financiers. It is clear that with the current laws on industrial property and the current partisan scientific diffusion system, without international guarantors, only multinationals and large public bodies could afford to produce important inventions for the future of humanity. Unfortunately, for these multinationals and public bodies that do not do their social duty, the undersigned has realized that they have been mistaking the fundamental principles of world energy since the advent of the industrial era and that the state of the art, until proven otherwise, it can even advance virtually, without paying all the taxes that world power centers demand. These inventions cannot be hidden forever.

The least cumbersome version to produce compressed hydroelectric energy is the one that the undersigned used (virtually) in the wells in a patent filing of 11/08/2016 and

in the oxygenator heart of the blood deposited on 29/05/2018, while the storage of flight system patent with electric jet fans took place on 01/06/2017. Although all these solutions have all been declared “perpetual motion” by incompetent bureaucrats, with the silence of science and legislators, these solutions have represented the starting point for the conception of “primary and induced interactive global linear motors”. This solution is the most suitable for adding the electromagnetic thrust to the reaction thrust tunnels, for the simple fact that it develops vertically together with the reaction thrust as seen in figures 5, 6, 7, where the coupling is seen in Lorentz and Newton thrust series.

It is the duty of the undersigned to update again the virtual state of the art of terrestrial and air transport systems, waiting for the world institutions to create the conditions for designing man-made plants globally, not relying only on nuclear, aeronautical specialists, thermal, but putting together different experiences in order to identify the synergies that have escaped, which until now have also prevented from putting together the thrust of Newton and Lorentz.

According to Maxwell’s equations, a variable electric field induces a magnetic field in the surrounding space and a variable magnetic field induces an electric field. The combination of the two effects gives rise to the electromagnetic wave that propagates in space transporting energy even after the original particle has stopped oscillating. In fact, the wave has a sinusoidal shape and does not require a material support. But, for the undersigned, as described in the recent patent filing entitled “aerospace and submarine transport system with primary and induced interactive global linear motors” (Italian patent filing no. 102020000000031 of 03/01/2020), if we want to create a stable and safe aerospace transport system, especially in the initial phase, in order not to endanger the lives of crews and passengers, we must start from the organization of the work of the airports. We must reinforce natural electromagnetism by

creating a kind of overhead railway, where the cars, equipped with autonomous energy, are also pushed from the initial station and push each other in the air while maintaining optimal distances. This sort of air railway will cost much less than the current land railways that need bridges, viaducts, tunnels and the electrification of the entire railway network.

Obviously, small private means of transport cannot be managed by airports, nor can they enjoy the fixed electromagnetic thrust produced underground, therefore it was necessary to study a different solution that also uses the drive wheels, to increase the initial thrust needed to take-off of the means of transport. For this reason, this update of the hydroelectric car was born, which also becomes a steering wheel and much more functional, solving in addition to environmental problems also a large part of the structural ones. It will not be convenient to build large super roads, tunnels, railways, not even locally, because energy will cost little and infrastructure will cost a lot, both to build them and to do maintenance.

The formula that binds electromagnetic waves to energy is E = c x B, where c is the speed of light and B is the magnetic field.

The magnetic field is due to the movement of electric charges. It depends on the size and strength that the conductor passes through. It is measured in Tesla (T = Weber / m2), where Weber is equal to the magnetic flux which, passing through a loop, produces an electromotive force equal to 1 volt when it is uniformly reduced to zero in 1 second.

The electric field is related to the potential difference in a conductor. It is measured in volts / meters.

Without going into the details of the calculations of the electrotechnical design which will be very complex for the quantity of the components that will produce induced currents and for the immense quantity of the solenoid wires, the choices of the voltages and the frequency of the currents, it is worth remembering the fundamental concepts of

electromagnetic induction.
For the Faraday-Neumann – Lenz law. The value of the induced electromotive force is equal to the ratio between the variation of the flux of the magnetic field and the time required to have this variation ($Ii = \Delta\Phi / \Delta t$).
In the system proposed by myself to fly in the atmosphere and in space, both the windings of the electric motors of the turbofans, and those of the pumps, both those of the current generators connected to the turbines, and the motors that will make the magnets move, both the water itself, which has a bipolar molecule that polarizes, will be simultaneously found inside the magnetic field and the solenoids of the induced currents that will be and produced outside the turbofans, and the cylindrical tanks in which the water that produces the water circulates. primary energy by means of the product of the pressure for the flow rate for the mass density ($E = P \times Q \times \rho$).
In this system, all these electromagnetic fluxes can influence Newton and Lorentz thrust differently by regulating the direction of rotation of the propeller and impeller motors, while unwanted functions can be isolated from the magnetic flux by incorporating the non-magnetic materials, as would return paths of the permanent magnets, which can be inverted by changing the direction of the electromagnetic thrust.
As we know, the technological definition of the current linear electromagnetic motors is as follows: “they produce a force instead of a torque, as they were conceived by imagining to unroll the rotor and stator of the current electric motors.
The most famous application of linear electromagnetic motors is that of electromagnetic levitation railway lines (Maglev), where the inductor is the locomotive itself, while the induced is a solid steel continuous sheet of the length of the entire railway section.
In Maglev, the inductor (locomotive) consists of a flat magnetic structure on which a winding powered by a symmetrical three-phase system of voltages with “p” pairs of poles, frequency “f” and polar pitch “t” is placed. The synchronism

speed is v = 2 f t. By appropriately adjusting the frequency and the polar step, train speeds of over 500 km / h can also be obtained. This system was created only to connect railway stations placed on linear paths without path deviations due to the difficulties in changing the direction of travel as occurs in current railway exchanges Infact, the inductor, in its rectilinear movement, cuts the conductors of the armature generating f.e.m. and induced currents. These currents, immersed in the same magnetic field that produces them, are the seat of electromagnetic forces that push the armature (fixed to the ground) in the same direction as the magnetic field, but with the opposite direction. In the case of the locomotive, since there is not the rotation axis of the armature but two inductors that balance the thrusts on it, linear thrust is obtained without physical contact between the metal masses of the inductor locomotive and the induced sliding track.

Energy savings and higher speed than the current trains in the maglev take place because the frictions between the mechanical parts and between the rails and the wheels are eliminated due to the fact that the two inductors are attracted to the armature but simultaneously repel each other. Therefore, the air gap between armature and inductor remains constant and the locomotive moves linearly parallel to the armature track.

The Maglev solution has the main defect which is that no changes in direction can be made and the making of curves is also a problem due to the centrifugal force of the masses. But the main flaw is that since there is no system to produce sustainable energy on board the locomotive, the power supply must take place from the outside, as is the case for current electric trains. Although it is possible to power only the section of track involved in the passage of the train, the infrastructures external to the means of transport still involve significant costs and a considerable technological commitment, without solving the problems of sustainable production of clean primary energy, both in power plants than on board the means of transport. The ideal solution is always

the one that would allow the Newton and Lorentz thrust to be produced without the structural costs of bridges, tunnels, thermal power station tracks and related management and maintenance costs. Above all, these structures are subject to earthquakes, like all fixed structures and can be damaged even if they do not collapse

Today, unfortunately, due to the divisions of scientific, economic and political technical skills, all inventions are incomplete for one reason or another and all compete with each other, not to find global solutions, but specific solutions to individual problems, including land, road, rail, air, marine and submarine transport, but also in other sectors there is the same competition, such as the production of agricultural vehicles and earthwork, which have not solved the main problem that is production fixed and mobile of sustainable primary energy.

Sustainable primary energy production had to be the first problem to be solved to start the industrial era, instead it became the last. It is better to write these things also in the filings of the current industrial patents, where before talking about the inventions it is necessary to take stock of the state of the art of the sector concerned. But to take the exact point of the state of the art, one should also investigate the reasons why world legislators have not encouraged the filing of intellectual patents that would have opened the mind to other inventors before embarking on wrong paths, especially energy. Choices of the wrong primary energies have created disasters of all kinds, including global public debt and current conflicts of interest that prevent real sustainable development and also a sustainable race to conquer space, which cannot begin with the energy that it runs out because it cannot be renewed simply and naturally.

A complete system that produces electricity on board does not need to build a fixed armature on the ground. The non-rotating global linear motor can be made up of permanent magnets circulating linearly in the external grooves of the tube that contains the fluid-dynamic system by mounting the same magnets

on a mechanical transport roller chain equipped with fins on which the magnets are screwed, after inserting an insulating gasket, driven by one or more electric motors and gear wheels that they circulate linearly along the entire length of the hydraulic system, which in this way also becomes an inductor of electromagnetic energy. In fact, by incorporating in the return slots the chain that transports the magnets in a magnetically insulated tube, we can create a continuous one-way magnetic flux, which interacts with an external solenoid to the fluid dynamic system producing the Lorentz thrust. We do not need to make two opposing inductors and the sliding track in the center along the entire path. Not needing the sliding track, this system can also be implemented in the airspace. While on planet earth it is better to combine it with Newton’s thrust to travel in the atmosphere.

If we hypothesize to divide the external circumference of the containment tube of the turbofan and the pressurized hydroelectric plant below with 36 external slots for magnet sliding (one every ten degrees) we will have 18 rows of permanent magnets that go down and 18 that go up in the inductor circuit. We will only use non-isolated rows. In this way we will produce two overlapping but separate inductor circuits, as they perform different functions internally: One produces the Newton thrust and another the compressed hydroelectric energy which is the primary energy of the entire plant. The armatures of these two different superimposed systems, on the other hand, will consist of simple long solenoids when the entire plants and produce two Lorentz thrusts that go in the same direction. There is no need to have the induced armature fixed to the ground as in the Maglev as they always flow in the same direction to infinity. The total thrust will depend on the quantity of the components used, their size, their speed and the size of the external induced solenoids, according to the laws of Newton, Faraday, Neuman, Lenz, Lorentz.

The interactive energy that would protect the environment is much cheaper than that which has polluted it irreparably. But

the undersigned has already written these things in many publications. In this intellectual patent filing, which is the only form of patent that can be filed by an inventor unrelated to the centers of power, although this form of filing under current laws does not grant rights to inventors who cannot pay meaningless taxes (only inventors have to pay taxes even if inventions do not produce any income), the simultaneous realization of the thrust of Newton and lorentz on air transport means that has never been imagined. In addition, with an autonomy of almost infinite navigation autonomy, which does not depend on the energy source but on the wear of the materials that make up the system.

In this patent filing we speak above all of Lorentz's thrust, of the reason why it must be added to that of Newton also in land transport systems. Not just to navigate space. In fact, the Lorentz force being a vector force based on electromagnetic waves, reduces the effects of gravity and the weight of the aircraft will no longer be P = m * a but equal to P = m * (a – aL – aN), where "a "Is the acceleration of gravity" aL "is the acceleration produced artificially with Lorentz's force)" aN "is the acceleration produced by Newton's force. If "aL" and "aN" are powerful until canceling "a", the weight (ie the force with which the aircraft is attracted to the earth) becomes zero.

The Lorentz thrust is expressed with the following vector product: $\vec{F} = q\vec{v} \times \vec{B} x \sin \phi$, where q indicates the electric charge in Coulomb, v is the velocity vector in m / s with which the electric charge moves, B is the field magnetic in Tesla to which it is subjected, ϕ is the angle between V and B. If we consider that the Lorentz force in Newton (Kg xm / s2) is exerted by the two overlapping external solenoids that enclose the electric turbofan and the primary hydroelectric energy production plant, we can realize the direction of this force by ideally putting the right hand on a wire of the coil of the solenoid, where our fingers indicate the direction of the current and the thumb indicates the direction of the magnetic field. The Lorentz force is always perpendicular to

the current velocity vector (qv) and to the magnetic field (B), which in this case, are perpendicular to each other and express the maximum force, being the sin of the angle of 90 degrees equal to “1”. Therefore, Lorenz’s force follows the spiral of the wire parallel to the longitudinal development of the solenoids that surround the electric turbofan and the external tube in which the compressed hydroelectric primary energy is produced.

Obviously, it is not easy to accurately calculate the force produced by an interactive global linear motor because within the solenoids that express the final force there are many different materials, with different proportions and arrangements (iron, copper, steel, light alloys, water, air). Some of these elements move continuously, such as permanent magnets and water. All these elements have a different magnetic permeability, which should be inserted in the Biot and Savart formula to calculate their own magnetic field modulus.

As an indication only, this formula is given: B = m x i x / 2π x r, where: “m” is the magnetic permeability, “i” is the current intensity, “r” is the distance from the wire traveled by the current.

To simplify the concepts, the induction vector module gives only the formula of the magnetic field of a common solenoid: B = mx N i / L, where “m” is the magnetic permeability, “i” is the current intensity, “N “Is the number of turns,” L “the length of turns.

If the solenoid is very long with respect to the diameter of the turns, as in the case of global linear motors, the magnetic field created inside is parallel to the axis of the solenoid. The direction of the magnetic induction vector is that of the axis while its direction is that of a screw that rotates clockwise (right-handed screw) while it is screwed in the direction of current I.

Beyond the formulas that express the basic scientific concepts, what is important is the fact that today we have the possibility to vary the magnetic field and the Lorentz force,

by varying the circulation speed of the permanent magnets, or by varying the engine rpm of the electric turbofan, which are powered by compressed hydroelectric primary energy, which is produced by statically exploiting the pressure of the compressed air and the principle of impenetrability of the bodies, which expels the water that enters the pressurized recycling circuit in excess of a very simple autoclave by means of a modified pump which has a second power supply, in addition to the recycling one, which makes the water discharged by the turbine which produced the electricity return into the circuit. The division of the water flow between the two parts in the same system that falls through the modified circulation pump, can be assimilated conceptually to the division of the atom, but has no environmental contraindications, indeed it improves the quality of the water because every time the water re-enters the pressurized autoclave absorbs a greater quantity of oxygen due to Henry's law.

Obviously, the scientists and industrialists who produced terrestrial energy with fuels and the push to exit the atmosphere with chemical rockets or thermal gas turbofans, have not been able to advance the state of the art in the way indicated by myself because the technologies and scientific principles used by fuels are not compatible with electromagnetism as is the kinetic energy produced by a hydraulic turbine, whose current generator is powered directly by the turbine shaft itself, without unnecessary thermal passages.

To produce the Lorentz thrust from fossil and chemical fuels, the necessary quantity of fuel must be transported on the aircraft, which, in addition to having an economic cost, also has a volumetric mass and weight. In addition, it is necessary to go through energy transformation processes that produce steam or combustion gases, expansion and compression cycles are unnecessary pollutants and expensive compared to energy produced cold with the recycling of the same amount of water, which having a density about a thousand times higher than a

combustion gas, at the same pressure (static) and weight flow it produces an electrical power about a thousand times higher than any gas. In addition, fuels run out while compressed hydroelectric energy is the only renewable energy that can be produced independently, recycling both water and air which always return to the initial state.

As stated by Maxwell, Faraday, Ferraris, Lenz, Lorentz, and demonstrated in many practical applications, we must assume that if we slide permanent magnets into the slots of the external wall of the turbofan and we create an air gap and a second external wall that incorporates a solenoid, The moving magnets become inductors and the solenoid becomes an induced armature that produces an induced current that opposes the variation of magnetic flux that generates it and therefore also produces the Lorentz thrust together with that of Newton. This is what is shown in fig. 1, which also inspired figure 2, where, instead, the Lorentz thrust is made by a special solenoid that even incorporates the primary source of compressed hydroelectric energy, specially developed in concentric tanks pressurized in low and high pressure, which as written, is the solution already used by myself, in unnecessary (for the world ruling class) deposits of previous patents that would have been useful to purify and lift the water from the wells and to circulate and purify human blood, without energy costs and batteries to be recharged.

In these solutions, considering that the magnetic flux can be inverted by changing the supply polarity of motors that make the magnets move, we can also align the Lorentz thrusts in the direction of the Newton thrust produced by the turbofans. In addition, by adjusting the thrust force and acceleration by means of variable speed motors that feed the water circulation pumps, turbofans and small motors that circulate the permanent magnets.

The legend of the drawings is reported:

Fig. 1, Modified electric turbofan with Newton and Lorentz thrust:

(1) Electric turbofan; (1.2) variable speed motor controlled

by inverter; 1.3 inverter controlled variable speed motor for magnet movement; (1.4) transmission chain complete with permanent magnets; (1.5) open sliding track for chain with permanent magnets; (1.6) closed and magnetically insulated sliding track for chain with permanent magnets; (1.7) air gap; (1.8) solenoid external to the turbofan in a metal housing;

FIg. 2, Plant for the production of compressed hydroelectric primary energy with Lorentz electromagnetic thrust, complete with air and vapor recovery scheme and modified water and compressed air tanks for the production of electromagnetic thrust:

(1) external water tank at atmospheric pressure; (1.1) level regulator with capacitive probes; (1.2) safety valve with conveyed air discharge; (1.3) variable speed motor with gear wheel for transmission chain; (1.4) transmission chain of permanent magnet transport; (1.5) open sliding track for chain with permanent magnets; (1.6) closed and magnetically insulated sliding track for chain with permanent magnets; (1.7) air gap; (1.8) solenoid external to the external water tank in a metal housing; (2) high pressure tank; (2.1) level regulator with capacitive probes; (2.2) safety valve with conveyed air discharge; (3) pump used as a turbine; (3.1) alternating current generator; (3.2) pump motor coupling joint; (4) suction filter and anti-air bubbles; (5) check valve; (6) pump with double separate power supply up to the impeller; (6.1) double curve with crossed separator partitions in low pressure (lp) and high pressure (hp); (7) variable speed motor controlled by inverter; (8) pump motor coupling joint; (9) air and steam recovery tank; (9.1) safety valve; (9.2) pressure switch; (9.3) water level probe; (9.4) mini electric compressor; (9.5) water drain solenoid valve.

Fig. 3: Plant for the production of compressed hydroelectric primary energy with Lorentz electromagnetic thrust, modified for the tipper versions and the production of the horizontal electromagnetic thrust: it is possible to note the displacement from only one side of the pump used as a turbine (3) and of the generator current (3.1), so that no air bubbles

enter the energy circuit, which is also protected by the suction filter and anti air bubbles (4);
Fig. 4 shows in a very schematic way how the transmission of motion occurs to the drive wheels in hydroelectric cars, where the torque is applied to the periphery of each individual wheel rim of the rubber wheel (12), by means of a cylindrical tooth transmission between a crown (12.1) and a spool (11.1). (13 and 14) are the supports of the electric motors (11) front and rear. These supports are fixed with pivots to the axles and also act as protective casings for the gear transmission. They ensure the same oscillation as the current wheels, carry the flange on which the electric motor (11) is mounted which carries the sprocket (11.1), and are crossed by the shaft (15) with the rotation bearing that carries the brake disc, the flange on which the rim (12) is mounted which is cantilevered by the front axle (16), equipped with an articulated frame to allow steering, or by the rigid rear axle (17).
Fig. 5 shows the longitudinal section of a car equipped with global linear motors and pushed by Newton and Lorentz. This diagram shows the figures concerning the components used to make the Lorentz thrust (FL), the Newton thrust (FN), the driving thrust due to the wheels (FM), the electric motors of the wheels (11), the wheels (12), the support support for the front (13) and rear (14) wheel drive. front axle (16), equipped with an articulated frame to allow minimum turning radii, the rigid rear axle (17), the electric actuator (18) which changes the inclination of the global linear motor placed under the car floor (Fig 1+ Fig 3).
Fig. 6 shows the same figure 5 but in a special version to be supplied to the firefighters, as the current way of putting out fires is incorrect. Aerial firefighting equipment must stop on fire outbreaks, producing normal artificial rain, located on the outbreak, not an inaccurate and violent jet of water that does not hit the target and does not allow the necessary time for water to enter the outbreak. To do this it is necessary to stop, during shutdown, the horizontal thrust of Newton and Lorentz produced by the global linear motor

placed under the floor and reinforce the vertical thrust produced inside the passenger compartment. The best solution is to fill the passenger compartment with cylindrical water tanks (11) equipped with sliding tracks for permanent magnets such as the tank (1) and external solenoids (1.8) and accessories (1.3,1.4, 1.5, 1.6, 1.7) powered by primary energy produced by current generators (3.1) of both global linear motors (inside and outside the passenger compartment). In this way, with the same installed power, we can keep the extinguishing tanks fixed on the fire outbreak by adjusting the induced currents, until the extinguishing water runs out, which comes out of the drain valves (14). Normal flight conditions are restored immediately, with thrusts of Newton and Lorentz.

From the reasoning made on this figure and other similar ones made in the previous patent filing entitled “aerospace and submarine transport system with primary and induced interactive global linear motors”, we must deduce that if we transport inert material or food reserves by air, the weight of these elements can be lightened if inserted in special containers equipped with external sliding of the permanent magnets powered by the primary energy of the transport aircraft, provided that they are equipped with an external solenoid that produce the Lorentz thrust. In the same way, if we transport a car of the future in a container that must reach another planet, or travel in an underwater environment, it is better to put into operation the linear motors that produce the thrust in the desired direction, anchoring to the floor and walls of the container, the car, which will lighten the thrust of the global linear motors of the space or submarine transport vehicle. Obviously, the car of the future designed with suitable seals and sufficient oxygen air supply can also be used to inspect planets and seabed.

Fig. 7 shows the cross section of a car equipped with global linear motors and thrusts of Newton and Lorentz, where you can notice in particular the overlap of the vertical thrust group (Fig. 2) in the center of the passenger compartment and the

horizontal one placed below on the platform (Fig.1 + Fig.3) which can oscillate about 20 degrees, Fig 4 with the wheels and the axle; the right (19) and left (20) floating air cushion, which come out of the containers (21) through the automatic doors (22).

When the car is to be used as a floating vehicle, during the descent phase, the doors (22) are opened by means of two electric actuators and the motorized rotating shaft (23) unrolls the air cushions (19–20), while a special compressor inflates them. Since the floating system consists of two opposite and symmetrical air cushions (19-20) that wrap around the lower part of the car, it will be the same external atmospheric air to crush towards the car The two ends of the air cushions that will fit together between them being shaped with the dovetail shape male female (19.1 -20.1). Therefore, when both cushions are swollen and have reached the surface of the water, the joint between the two cushions will support the weight of the car without separating the cushions. When the car rises from the water to fly into the atmosphere, the deflating air cushions begin to separate, while the empty air cushions wind up on the motorized shafts 23, performing a predetermined number of shaft revolutions and closing of the doors 22.

Today, world authorities are equipping cities with battery-powered car charging points. These charging points are powered by fossil thermal energy. This is all wasted science and technology that does not solve any global environmental, economic problem. Adds new damage to previous ones. With thermal energy you don’t go anywhere, even if we alleviate urban pollution with battery-powered cars, pollution is equally produced outside the cities in greater quantities, because the transport and storage of energy require greater amount of thermal energy produced.

In the meantime, land, sea and air transport continue to pollute with impunity in the name of progress, but for myself, also in the name of scientific ignorance, since science has never deepened interactive research, which would lead to the

design of anthropic plants. energy and purification with interactive principles to save resources. In particular, flying and floating cars without fuels could be an instrument of salvation for humanity in the face of earthquakes, tsunamis, floods, glaciations, which become increasingly frequent, not only because of the pollution produced by man, but also for natural geological phenomena, such as the reversal of the magnetic poles of the earth, of which the undersigned spoke in the article http://www.spawhe.eu/the-lost-civilizations-einstein-s-thought-and-survival -Energy /. With the car flying and floating, the world people could be saved quickly, instead, they have to queue for fuel distributors, who will immediately run out of their goods. In the face of major emergencies, the streets become clogged with cars without fuel and without electricity. They become more a hindrance than an aid.

For many experts, pole reversal is approaching, noting that the speed at which magnetic poles are deviating from geographic ones. The last magnetic reversal occurred about 41,000 years ago, when the magnetic field took about 450 years to move from the North Pole to the South Pole and then return to the starting position.

How can science keep silent about the pollution of land, sea and air transport vehicles, while no world government has financed the experimentation of compressed hydroelectric energy that the undersigned has proposed for over four years, after which in previous years it proposed the version fixed without compressed air?

The pollution that an airplane produces is crazy. Just think that from a small online research on costs and pollution produced by current flight systems (http://www.focus.it/tecnologia/innovazione/quanto-carburante-consuma-un-aereo-di-linea) , with a little approximation, it is estimated that a Jumbo jet on a route of about 6 thousand km (for example Milan-New York), consumes more than 63 thousand liters of kerosene, an average of 19 liters per nautical mile (1 , 8 km), about 158 for each passenger (400 in

total). For each seat, 4,000 kilos of carbon dioxide are also produced. Short routes have proportionately higher fuel consumption because 1/3 of the fuel is burned during take-off. On long flights, however, the proportion drops to 1/8.
Thermal energy is the biggest mistake of world science, which implies more disadvantages than benefits: fuel costs, energy consumption for cooling, the production of toxic gases that to be neutralized, would require purification plants that science has not designed and it also kept silent on the proposed urban global purification. Until proven otherwise, it is not the heat that produces energy, but the pressure produced by the combustion gases, which press on the cylinders of a piston engine, or make a gas turbine turn. This can also be done by the compressed air used statically as the undersigned has shown by purifying the environment and economically saving.
In un sistema di trasporto aereo a reazione, il rendimento di una propulsione aumenta quando più si avvicina la velocità dell'aria che spinge a quella del velivolo che si muove. I due fattori che lo influenzano maggiormente il rendimento dalla spinta sono la velocità W con cui il fluido lascia i propulsori e la velocità di volo del velivolo V: tanto più W è maggiore di V tanto è minore il rendimento propulsivo, che è determinato tramite la relazione: 2 / [1 + (W / V Much higher force is required when the aircraft is stationary.
In fact, a body persists in its state until an external force modifies the state of quiet. As V increases, the propulsive efficiency increases (theoretically it could become equal to 1 (100%) if V could increase up to become equal to W). Taking into consideration that the propulsive efficiency depends on W / V, while the thrust is given by the formula: M * (WV), where M is the mass flow that crosses the turbofans in the unit of time, it is noted that to obtain propulsive efficiency high, therefore with low specific consumption, while keeping the thrust equally high, the mass of air to be accelerated must be privileged over its speed. This is the reason why, the lighter helicopters also rise vertically while the planes take advantage of the kinetic energy developed by the thermal fan

heaters mounted horizontally under the wings and the rolling friction of the take-off carriages to rise towards the atmosphere by floating in the air. In fact, helicopters move much more air than their aircraft to lift. If the planes had more energy at their disposal, they could feed a greater amount of turbofans and would fly up like helicopters or spaceships in science fiction films. Obviously, not even in science fiction films, nobody ever thought that energy could be produced with water and compressed air, nor that jet turbines could be incorporated into electromagnetic thrust solenoids, which not only produce Lorentz thrust, ($\vec{F} = q\vec{v} \times \vec{B}$) which depends on the quantity of electric charges and the speed with which they move, but we also have a local reduction in the weight of the means of transport due to the accelerations of Lorentz and Newton which locally oppose gravity by reducing the weight ($P = ma - aL - aN$).
It is obvious that flying cars with interactive global linear motors and thrusts of newton and lorentz, apart from the wheels, which they will rarely use, have nothing to do with current cars, however also the modification of the transmission system of motion to wheels makes it possible to lighten the weight by eliminating the gearbox with relative differential, since the transmission of the wheel revolutions will take place by means of the transmission ratio between the crown wheel, integral with the rim, and the three-phase asynchronous self-braking motor that spins the spool. As an example, with the primary diameter of the crown of about 600 mm and that of the spool of 200 mm we have a reduction ratio of the engine revolutions equal to 3. But what is even more important is the fact that applying the driving force on the primitive diameter of the rim and not on the wheel axle (as it currently is), we multiply the driving torque for the transmission arm, therefore we reduce the force necessary for the transmission of the motion to 1/3 and considering that the rubberized part of the wheel full load is 10 cm high where the resistant torque is applied, we also improve the acceleration of the means of transport with a low number of revolutions and

torque.
If we start from a two-pole electric motor that performs 2840 rpm, the maximum peripheral speed of the wheel will be 946.6 rpm, with the rubber wheel with an external diameter of 0.8 m (circumference 2,512 m), we have a speed maximum hourly speed of 2378 m / minute, equal to 142.6 km / h.
With the current system that has the gearbox connected to the central engine, the transmitted power value is always the same for any gear, both on the engine and on the drive wheels; this is due to the fact that the power is given by the torque for the number of revolutions and the resistant and driving torque are applied on the same rotation axis, whereby the torque increases when the number of revolutions decreases and vice versa. With the electric transmission, regulated with an inverter, the power transmitted is not the same but gradual, moreover, the application of the driving force on a rotation arm that approaches the resistant arm, which is applied on the tire tread, reduces overall the total absorption, both at minimum and maximum rpm.
By making an approximate calculation of the forces that oppose movement on rubber wheels, the following values can be assumed for a vehicle that fully loads 2000 kg:
Rolling resistance on asphalt (20 kg / 1000) = 40 kg;
Aerodynamic drag (Eiffel formula) K * S * V2, where k = 0.0054 for v = 142 km / h S = 2 m2 = Kg 218
Inertia resistance for the supposed acceleration of 1 m / s2 (1000 * 1 / g * 2 t * ka), where ka = 1.2 = kg 244.
Considering the calculated total motion resistance of 502 kg (40 + 218 + 244), we calculate the total power needed for the translation P = F * v (m / s) / 1000 in kw = 502 * 39.44 / 1000 = 19, 8 KW.
This calculation is in line with the powers of lithium batteries electric cars that car manufacturers are marketing. There is a significant difference with the corresponding thermal engine of the same car model, whose power is about four or five times greater than the battery power. This difference, in part, is due to the fact that for reasons of

cost, the performance of electric cars is limited, but is mainly due to the low efficiency of heat engines, which stands at about 35% of the lower calorific value of the fuel. Therefore, it can be said that thermal engines are practical to manufacture but are polluting and with low yields. While electric machines, having little autonomy of service, are impractical and expensive. Instead, we are at year zero for hydroelectric cars that could have the best environmental and energy yields, since, as written above, they do not need fuels and the installed electric power can be reduced significantly, by applying torque to the periphery of the wheel rims and increasing the diameter, decreasing the costs of energy equipment and the size of the hydroelectric plant.

Suppose we build a small pressurized autoclave system that produces energy for the car weighing 2000 kg, hypothesized above by means of an alternating current generator (2.1) coupled to a pump used as a turbine (pat), which is capable of produce the energy calculated above. Which, as written above, applied to the periphery of the wheel rims with a gear transmission and electric motors, is reduced to 1/3 of the calculated one (19.8 / 3) = 6.6 Kw.

Assuming to build an all-wheel drive vehicle, we will apply a two-pole, self-braking two-phase 2.2 kw asynchronous motor to each wheel with a brake operating in direct current. The brake is powered by a rectifier housed inside the terminal box. The rectifier is equipped with surge protection devices. The cooling fan is located in the rear part of the engine. The salient features of the self-braking motors with direct current brake are the extreme silence during braking, the progressiveness in the starting and stopping phases of the engine. This makes it possible to check the wheels by means of the motors at all times and to avoid overheating of the brake discs, which only intervene in emergencies. The self-braking motors are particularly suitable to be powered by inverters, in our case they are equipped with a double shaft protrusion and with speed detection devices, with angular position of the shaft (encoder), to integrate the functions necessary to the

system ABS braking and differential speed in curves, which today are made, certainly with higher costs, separately, on the rotating devices of the wheels and brakesIn fact, small 2.2 kW self-braking motors with a braking torque of about 20 Nm are certainly not able to brake the moving mass of a 2 T transport vehicle, therefore the current braking system must be preserved, but the small decelerations and the small braking can be managed by these motors which allow gradual accelerations and slowdowns. Furthermore, being connected directly to the rotation of each wheel of the vehicle, the ABS control electronics can be transferred to them, as well as the control of the speed of the wheels in curves. In fact, having electronic control sensors scattered in mechanical organs is not very functional. It is certainly better to insert them in electric motors, which can be easily replaced and overhauled. The protection of the power windings can be pushed up to the immersion resistance (IP67) according to the intended use for the vehicle.

To make the hydroelectric plant, the choices can be many, but suppose we take advantage of an air cushion pressure of 360 m of water column and an electric pump used as a turbine with a flow rate of 12.5 L / s. Assuming the efficiency is 0.70, applying the formula Pu = η * Q * Hu / 102, we have an energy production of 30.87 Kw / h (0.70 * 12.5 * 360/102).

By assigning a head of 1.0 m and a efficiency of 0.6 to the pump with separate double power supply, the power absorbed by the pump, which has a double flow rate than that which passes into the turbine, calculated with the formula 1 * 25/102 * 0, 6 = 0.40 KW. In this case, the ratio of energy spent and output is 77.175 (30.87 / 0.40). In fact, the pressure drops in the valves, in the turbine, the special pieces and the outlet losses, are all absorbed by the dynamic pressures that develop in the pipes that feed the pump under a positive head, on both sides, while in delivery we have appreciable pressure drops, not exceeding the water level (which is incompressible). It is no wonder this result, considering that compressed gases are more powerful, flexible and cheaper

energy accumulators than electrical energy accumulators. It can be easily understood that with the help of the compressed air cushion and the small powers required by the valve and pump motors, it is very simple to start the system without any starter motor.

Who will bring the water inside the autoclave is the circuit on the right side of the pump, where the static pressures on the delivery and suction are in balance and therefore the direction of the water flow depends only on the rotation of the impeller. Consequently, also the water coming from the left side is inserted in this flow, not only because the impeller is common, but also because the dividing partitions (hp / lp) of fig. 2 which arrive close to the profile of the impeller, act as moreover, the anti-return valve allows the rotation to enter every quarter of the cross section of the cruise shown in FIG. 2 in succession water in high and low pressure (hp + lp) which having the same direction add up, do not conflict, also in accordance with Pascal’s law which states that the pressure expands in all directions (when it is static). When there is a unidirectional flow, conditioned by the rotation of a pump, the walls of the pipes and check valves the dynamic pressure is forced to expand in the direction of the flow.

Suppose that both alternating current generators (3.1) coupled to a pump used as a turbine (pat), which exploit the useful height Hu = 360 m and a double-powered electric pump with a flow rate of 12.5 L / s, produce 30.87 Kw / he that the ratio between the energy spent and rendered as written above is 77.175, if we divide this value by the average efficiency of the thermal energy (0.35) we have the convenience ratio between a compressed hydroelectric engine and a heat engine, which equal to 220.5 (77.175 / 0.35). This means that an interactive primary engine not only does not produce pollution, it does not require the purchase of fuels and fuel tanks, and also 220.5 times more convenient from an energy point of view. Therefore, with two current generators that produce 30.87 + 30.87 kw / h to be distributed to the electric

motors that feed the drive wheels of fig. 4 (used only in the take-off phase), to the engine they feed, the electric turbofan of figure 1 and to the small engines that move the permanent magnets that produce the Lorentz thrust in the three induced solenoids of fig. 1 and 2 shown in sections fig. 5, 6, 7, will be able to easily fly a medium sized car, such as the one indicated in these drawings. Prototypes will establish scientific truth. Even if we were to double or triple the installed powers for safety reasons, considering that the installed powers do not require the purchase of fuels and do not require investments in roads, viaducts, railways, tunnels and medical expenses to treat the lung diseases that produces the thermal pollution, there should be no doubt about what means of transport and work of the future should be.
The undersigned who has worked for seventeen years in the automotive industry, knows the potential of the organization of industrial work and it is certain that if we change energy sources, in a short time we could restore the environment and create sustainable development. The large series production that allows the transport sector has already worked wonders by creating quality technological components. The only problems he could not solve were the zeroing of CO2, the reduction of fine particles, and the costs that the fuels they entail. The modified compressed hydroelectric motor that produces clean primary energy and the electromagnetic induction that produces current generators and electric motors and the induced currents, which allow to produce the thrusts of Newton and Lorentz, avoiding thermal transformations, these very serious problems they avoided virtually, as they could have been avoided since the origins of the industrial age if science had reasoned globally. Without being divided into many sectors that have produced more disasters than benefits.

Flying and floating cars with interactive global linear motors and thrust of newton and lorentz.

(Twenty-sixth open letter to the International Court of

Justice and the United Nations)

The identification of interactive principles based on the exploitation of the static pressure of the compressed air and the circulation of incompressible water eliminates the costs due to fuels, nuclear reactors, electrodes that are consumed, energy accumulators, energy distribution networks. Primary energy can be produced everywhere in the instant it serves in fixed and mobile plants without the need to carry out large hydroelectric works, thermal, nuclear, solar, wind power plants. Nothing can be cheaper, more efficient and cleaner than the simultaneous exploitation of the static pressure of compressed air, the circulation of water and the one-way flow, because water and air are not consumed and the energy produced is due. to the product of air pressure for the flow rate and density of water, which is a thousand times higher than a combustion gas. Today, these combustion gases are used all over the world but they are a stupid solution both from an environmental, technical and economic point of view, which devalues the value of the entire world science and the entire ruling class. The current patent laws are a scam or a huge international mistake against inventors unrelated to the centers of economic power that have produced global warming and immense public debt. The main architects of this scam or mistake are the United Nations, which regulates patent procedures, inventors' rights and taxes to be paid through WIPO. Therefore inventors who are not linked to the economic centers of power that are the main victims of this system, must describe these anomalies even when they file a patent, being excluded a priori from any advantages that the invention would produce by not being able to pay the required fees due to the power games made by those who manage economic power, who pretend not to understand the most innovative inventions, which would undermine their obsolete and polluting systems, which should not even be accepted by international legal bodies, if political power games and economics did not conceal sustainable inventions, impeding their experimentation, which

cannot be done by small private inventors, devoid of any economic resource. The current laws, by not recognizing copyrights separate from industrial property, in fact, deny private inventors not tied to these powers the intellectual property which is recognized by all authors of intellectual works. In fact, only inventors are forced to pay the fees on patents granted even if they do not find lenders and only they are forced to spend money to make legal appeals against patents not granted by bureaucrats who do not have the requirements to scientifically judge the inventions that exceed the the current state of the art, above all, from a scientific point of view, using logical synergies between the scientific principles already legislated before the current industrial era by scientists such as Pascal, Bernoulli, Venturi, Torricelli, Henry, Newton, Maxwell, Lorentz, Einstein. Although these scientific principles have led to significant technological advances, they have not protected the environment, have not produced sustainable energy and have not been able to put together the push of Newton and Lorentz to conquer space, atmosphere and underwater environments. In fact, a lot of energy is needed to overcome gravitational forces and without identifying the interactive principles that make energy sustainable and clean, we have no hope of conquering space.

The narrow mindedness of lawmakers does not understand that if inventors turn into entrepreneurs to industrially produce a single invention, they cannot study and publish inventions related to the scientific principles identified. If an invention is truly innovative, it produces many side effects and many applications. Only the inventor can see these applications in advance, having studied the topic differently from the existing systems. Obviously, if he becomes an entrepreneur with little money, he takes many years to make only the prototypes of a single invention and the state of the art cannot advance globally. Instead, the advancement of the state of the art must be global, even if only virtual, until

the centers of world power admit their mistakes and really decide to finance interactive inventions, which compared to the current ones, have potential endless.

In fact, it is not enough to identify the correct scientific principles, it is also necessary to put them together correctly to prevent them from conflicting and optimize the yields in many applications simultaneously. These applications certainly cannot develop the inventor alone. For this reason, the United Nations and international judges should protect intellectual property instead of industrial property. In fact, the scientific principles well identified by pre-industrial scientists have never been coherently put together by modern scientists and inventors, dependent on public and multinational companies that still work in watertight compartments. With their silences, these are showing that they would not have identified the synergies identified by myself, even in hundreds of years. Not even the undersigned would have identified them, had he not left a large automotive multinational to work in a small company that installs public environmental and energy systems, where he works with a mentality opposite to that of large industry. Only as a pensioner did I decide to be an inventor to develop interactive systems, which as I have shown, would revolutionize both sectors from an energy and environmental point of view. However, I could not have proposed any solution without the important help received by the scientists of the past, mentioned above, who belong to the pre-industrial era and modern electromagnetism. In fact, the current development model has produced not only global warming, but also nuclear, alluvial and immense economic disasters is due to the fact that fluid dynamics has stopped in the pre-industrial state, while all other sectors have advanced and have exploited modern advances due to electromagnetism and electronics. Instead, the undersigned, he realized that by re-evaluating the neglected fluid dynamics principles and coupling them with modern electromagnetism and the electronics of industrial

processes, we can avoid thermal, nuclear processes and current hydroelectric systems that produce drought and floods. Therefore, interactive systems would render current large hydroelectric, thermal and nuclear works useless, also reducing the value of current renewable energies, which despite technological improvements, always have low yields, not being interactive but based on individual physical, thermal, chemical principles, electrolytic. The undersigned has already denounced these things to no avail for many years.

It was the end of the year 2018, I was writing another complaint article, when I realized that even the world transport system could undergo significant updates in addition to those already proposed by myself with the following articles http://www.spawhe.eu/aerospatial-pressurized-hydroelectric-transport-system/, http://www.spawhe.eu/hydroelectric-power-auto-with-torque-peripheral-to-the-wheels/, which can be read in PDF in English and Italian by clicking on the links mentioned Therefore, I interrupted the article I was writing and began to study the interactive solutions to put together the push of Newton and Lorentz in space and ground transport through collaboration between fluid dynamics and electromagnetics already cooperated very well in the cited patents, although world power centers have not appreciated them.

This presentation follows a few days that which accompanied the filing of a very important patent entitled “aerospace and submarine transport system with primary and induced interactive global linear motors”, as flying and floating cars complete the use of global linear motors. interactive, which in the previous intellectual patent filing dealt with only large international, space and submarine means of transport. This patent deals with the lightest land transport of the future which should not pass through international airports and ports.

It is very strange that after filing the patent filing No. 102020000000031 on 03.01.2020, on the large means of transport of the future and I was going to develop to publish this solution, the Italian patent office anticipated me, proposing the update of the claims of patent filing No. 102016000087373 of 25/08/2016 entitled “hydroelectric car with peripheral drive torque at the wheels” which can be read on the web at the following address http://www.spawhe.eu/hydroelectric-power-auto-with-torque-peripheral-to-the-wheels /, while the compressed hydroelectric energy and the patents concerning it, mentioned above, have been declared “Perpetual motion” by the Italian and European patent offices, including the patent filing on a new way of flying based only on Newton’s thrust which can be downloaded in PDF in English and Italian http://www.spawhe.eu/aerospatial-pressurized-hydroelectric-transport-system/.

Paradoxically, after three years and three months from the patent filing, the Italian patent office asks me to update for the third time the claims of the filing entitled “hydroelectric car with peripheral drive torque at the wheels”. I should report the page and the lines from which I will extract the claims for the third time, so that they can easily evaluate the extent of the changes made to protect industrial property, which the undersigned will never be able to exercise, having no economic means and not even the age to turn into an entrepreneur. If I don’t change the claims according to their bureaucratic wishes, they refuse me the grant of the patent. How they refused me the grant of the Italian patent of the “pump with double separate feeding up to the impeller” which, despite the simplicity, is one of the most important inventions of all time. Without this pump, it is not possible to create compressed hydroelectric energy that allows you to statically exploit the elastic pressure of the air by circulating water on the principle of impenetrability of the bodies. Therefore, without such a pump, sustainable primary energy cannot exist, which avoids thermal and nuclear

processes. This energy is not consumed, it only wears the materials that make up the systems. For this reason it is the only one that can power the electromagnetism of the current generators, which power the electric motors, which make the pumps turn, the turbofans that produce Newton's thrust, and move the permanent magnets that produce other induced currents that they produce the Lorentz thrust which adds up to that of Newton.

In other words, world science has not had the opportunity to realize that Newton and Lorentz's thrust to overcome the gravitational force can be added because no world industrialist wanted to modify the pumps, no world scientist has supported this invention. The international patent of the undersigned has lapsed because the undersigned has not paid the maintenance fees of the international patent. But what is worse is the fact that the Italian patent office, instead of supporting an Italian invention that with great effort had conquered the title of international patent, also undergoing the payment of international filing fees (about 3500 euros), said independently, that the pump with the double separate power supply up to the impeller is not an industrial invention, but a simple utility model. I refused the utility model title and continued to believe in this invention, producing other inventions with the same system, but not spending money on legal appeals or obtaining new international patents, having understood that the world public ruling class, including that scientific, reads a script already written on environmental matters. He denounces the problems, but does not find the solutions, despite the funding for public research. With their own silences, together with those of the multinationals, they hinder the financing of sustainable and interactive inventions without anyone world statesman noticing anything. Is all this ever possible?

I will try to satisfy the bureaucratic request of the Italian patent office to update the claims of the hydroelectric car to

receive the patent. But it is difficult to satisfy them, since they are mainly interested in the formal aspect. Not how it works and what side effects it produces. Probably, they did not realize that the hydroelectric car cannot operate without the pump with the separate dual power supply up to the impeller, which they have declared a utility model. How can a utility model circulate a car at a speed of 150 km / h without fuel? What are the claims if they don’t understand how the car works? The compressed hydroelectric engine virtually mounted on the hydroelectric car begins another era of world transport, it will undergo many changes and many updates, as thermal and electric motors have undergone in one hundred years of industrial history. But the operating principle is fundamental and distinguishes the difference between an intellectual patent that begins a new era of development and industrial patents that develop and update details. However, for world legislators, intellectual patents have no right if the inventor is poor and cannot pay unfair taxes which on public utility patents should not even be paid.

In this ambiguous international context regarding patents and industrial and intellectual property, the undersigned has realized that the compressed hydroelectric engine conceived to enter the hood of a car and make it walk on the earth, cannot be useful to make it fly in the atmosphere even if the energy principle is valid as a primary source of electricity. Therefore, it has changed the shape and substance of the compressed hydroelectric motor making it also inducer of a magnetic flux so that it can produce the induced currents that produce the Lorentz thrust. He also realized that the solutions to make cars fly must be different from those that make the planes and spaceships of the future fly, but the best primary energy will always be compressed hydroelectric. Hence, the undersigned developed two new intellectual patents. This does not prevent multinationals from developing new industrial patent patents if they also recognize copyrights to intellectually conceived systems. Personally, I don’t see any

contrast between industrial and intellectual property because cars and planes in over one hundred years of history have not been able to eliminate fuels and have not been able to add to Lorentz's thrust to Newton's thrust that it is indispensable for navigating in space but also to help Newton's thrust to overcome the Earth's gravitational force.

Today, almost all of the inventors are employees of public and private companies. As world governments have stopped making entrepreneurs, public inventors are also working to sell patents to multinationals, so no one develops global and interactive projects of general interest. According to the situation of world development in such conditions, all power centers, public and private, pretend not to understand interactive inventions, while paradoxical situations occur such as the case of hydroelectric cars which, after three years and three months from the deposit of patent, the Italian office is still examining hydroelectric cars, but only from a formal point of view. These cars, however, even if they have never been realized, from an intellectual point of view, were the first step in the revolution of the world's aerospace and transport through the "flying and floating cars with interactive global engines and thrust of Newton and Lorentz", of which I speak in this new patent filing. This shows that it is necessary to contest the entire system of international patents, for the simple fact that at least a part of the world inventors must be independent of the centers of power that have already made development choices and prevent the emergence of alternative solutions. Only by examining the real paradoxical situations that the current system produces can we understand that this system has never worked. Here are some examples:

1) The facts have shown that the world authorities and multinationals did not like the invention called "hydroelectric car with peripheral drive torque at the wheels" despite the fact that no car exists on planet Earth that works

with a hydroelectric engine and with the applied drive torque on the periphery of the wheels. Only these two facts demonstrate that the invention has the requirements of inventive originality and industrial applicability regardless of how the claims are written. The claims are a formal requirement that could damage the inventor's industrial property rights, not intellectual property, because hydroelectric cars do not exist, but intellectual property and copyrights do not exist, if the inventor does not find lenders and does not pays the patent maintenance fees.

2) Receiving the title of an industrial patent after four years from the patent filing and continuing not to find public and private financiers, for an inventor it is more of a damage than a benefit, having to start paying also the maintenance fees of the patent even if he doesn't have the means to be an entrepreneur. The undersigned has obtained fifteen national patents on topics of public utility, five of which transformed into international patents and one European, paying the filing fees unnecessarily and in some cases also the maintenance fees without finding interlocutors. Do not say that it is the laws of the market that rule. Because the market is distorted by the same international laws, which by not prohibiting the production of polluting energies, and by not requiring by law the producers of means of transport to close the cycles that open organic and inorganic, have allowed the multinationals of transport not to take considering the invention of the undersigned. These will continue to disregard my invention and I, as a mere retiree, would needlessly pay maintenance fees to maintain my rights. All of this is absurd and shameful on the part of international legal entities. Above all, since they are inventions of public utility.

3) The trade in patents between public and private bodies, allowed by world legislators, has created a web of interests between public researchers who sell and private companies who buy which also prevents us from talking about the alternative

solutions proposed by the excluded. The public inventors to sell patents to multinationals did not produce any global invention, which were developed only virtually without any funding and published on the website http://www.spawhe.eu. Even in the international conferences organized by the United Nations, COP, which should remedy the scientific and regulatory shortcomings of individual countries, there has never been talk of interactive energies and purification. How can private inventors bear the brunt of their research and maintain rights over their patents?

4) Private inventors can only defend themselves by fighting for the recognition of copyright and the intellectual property of inventions, which are recognized to all authors of intellectual works, but not to inventors who cannot find financiers, who are those who are not tied to power centers that deal with environmental and energy problems. The other public inventors are saved by selling partial and commercial patents affecting multinationals. Multinational corporations will never buy inventions which prove that their inventions are environmentally and economically wrong. Governments continue to fund research to investigate the seriousness of the problems, but do not experiment with the interactive solutions proposed by the few independent inventors so as not to antagonize the multinational that buy their patents and threaten layoffs if they lose market share.

Believing that I have finished my inventor activity, although I will continue to write some articles, I hope to be able to be a full-time grandfather and enjoy my six grandchildren, hoping that others will come. Life must continue and possibly become much longer than the current one, also thanks to robotics, cybernetics, but above all, the artificial heart oxygenator of the blood, which is an interactive mini global engine, considered "perpetual motion" by the Italian patent office, http://www.spawhe.eu/cuore-artificiale-ossigenatore-del-sangue

-autonomo-energeticamente/http://www.spawhe.eu/artificial-heart-oxygenator-of-blood-energyically-autonomous/ without the ministers of labor, economic development, the environment, and the governments of the past fifteen years have never defended or experienced one of the inventions of the undersigned, which until proven otherwise, are Italian inventions. This explains why this country that gave birth to the best inventors in the world is today the European tail light in terms of growth.

An invention not financed and not made by entrepreneurs and world governments is like a book written but not published by publishers. Therefore, an unread book is always new and when publishers decide to publish it, they cannot deny the writer's rights. This concept only patent lawmakers do not understand. Who do these legislators work for? Who do they obey?

I think that governments should be grateful for the birth of SPAWHE's interactive systems because having created an intertwining of too strong economic interests with multinationals, they have lost the ability to govern and plan global sustainable development. These interests would not have led to these solutions even in thousands of years, destroying the planet, even if the multinationals improve the performance of the machines. SPAWHE replaced the world public science that worked to sell its patents to multinationals, having virtually modified the chimneys, made the sewers purifying, created the limestone greenhouses, the superimposed biological ponds, the artificial welling, the submerged hydroelectric energy, the pumps with the dual power supply shot up to the impeller, the hydroelectric energy with the recycling of the water in an open vessel, the ion exchange desalination that produces energy instead of consuming it, the hydroelectric current generators, the hydroelectric car, the submerged hydroelectric energy in basins and wells that purifies the waters, the human autonomous energy heart that energetically purifies the blood for Henry's principle, finally, the hydroelectric car and the

aerospace land transport vehicles that would not consume fuels, the interactive global engines that they would realize together Newton and Lorentz's thrust to navigate the atmosphere, space, and under the sea. All these inventions were not made not because they are contrary to the principles of energy conservation, but because they reveal the inability of public and private science to make interactive and global scientific and technological reasoning, which are the only ones that can allow the real progress. These are the reasons why global warming cannot be fought and at the same time nobody has put together a clean rational system that produces the thrust of Newton and Lorentz on board the means of transport. These thrusts must be based on a primary source of clean and powerful sustainable energy that is derived directly from the terrestrial effects of gravitational force, as the undersigned has shown.

I confirm that I am against the current industrial patent system, but probably this system can only be defeated by itself. As it allowed to develop a polluting, inefficient, uneconomical and corrupt global system. At the beginning of 2020, I filed these two important intellectual patent filings on land and sea aerospace transport. World authorities have almost a year to decide whether to continue protecting industrial property, or to demonstrate greater democracy and farsightedness by granting intellectual property and international copyrights to inventors and access to the making of inventions to all public companies and private interested. Obviously by regulating taxes differently and by demanding inventors the taxes on the rights actually received, not the maintenance fees of the patents that have never found financiers, because governments allow to build and sell fixed and mobile systems that do not close the cycles that open.

Since the current laws allow only one year to transform a national patent into an international one, the undersigned, right now, asks the few people in the world, who believe in

interactive energies, to raise funds internationally, so that all the inventions of the undersigned , presented on the website http://www.spawhe.eu, which are now nobody's, since nobody has financed and implemented them, including the most recent ones, are considered to be the industrial property of an international joint-stock company, which will call "SPAWHE SPA" If this proposal of mine finds enough consensus to be implemented, it will replace the undersigned legally on all the rights acquired on the patents still in existence and on the expired ones that could be renewed and reported internationally, respecting the existing rules. Personally, as an inventor, I will not claim positions in this company and I will not be a shareholder, having no money to invest. If this initiative is successful, and my inventions will work and produce profits, I will be given royalties that will replace copyright.

I think this solution is not a good solution, because no multinational company, no matter how powerful it may be, can supply interactive energy and purification requirements all over the world, with about forty patents filed. But it will have the advantage of breaking the state of inertia of the United Nations, governments, multinationals and even environmental associations that protest but do not propose solutions. Today those who protest, without engaging in alternative designs, only ask for more funding in favor of those who have already produced global warming without identifying the interactive energies that would protect the environment, which also include the fuel-free terrestrial and aerospace transport systems published since 2016 and updated with these last two patent filings of 2020.

What will happen to the funds raised by SPAWHE S.P.A. if the United Nations, through W.I.P.O. (world intellectual property organization), reform their unfair system, separating intellectual property from industrial property at least for patents of public social utility (energy, purification,

health)?

I don’t think this will happen, since the United Nations and the international judges have never responded to twenty-five open letters from the undersigned, also sent to their public addresses. However, I think that SPAWHE S. P. A. can be achieved equally, with different objectives, equally important.

In fact, if the United Nations recognized the copyrights of inventors who produce inventions of public utility, the experimenters of such inventions would also be lacking in the world, since public bodies have shown not to collaborate with private inventors, preferring to collaborate only with multinationals who buy their patents. SPAWHE S.P. A. could become a private company that makes prototypes of inventors that are not financed by public bodies and multinationals, sharing 50% of their copyright or industrial property rights with the inventors, in the case of the sale of patents. I would be the first client of SPAWHE S.P.A. because I’m sure that even with the recognition of copyright to inventors, multinationals and public bodies will continue not to collaborate, having too many interests in common on current non-interactive inventions

Few people know that the inventors of public and multinational corporations already own the rights to share industrial property (not intellectual property). But only public bodies sell patents, while multinationals buy. In fact, when a public body sells a patent to a multinational company, the proceeds are divided by law to 50% between the inventors and the organization they belong to. The undersigned is also invited to international conferences as a speaker to illustrate his inventions, and being his inventions transversal to different sectors, he is invited to conferences on recycling, purification, renewable energy, medicine, agriculture, chemistry, the biology, transport, but does not participate in having to pay the living and travel expenses alone. While

taxpayers pay these expenses to public inventors, they also pay wages to produce inventions useful to humanity and the environment. Not simply inventions useful to multinationals that want to replace heat engines very slowly with battery-powered cars which are another palliative compared to interactive energy which needs neither fuels nor batteries, because energy can be produced in any corner of the Earth and space at the same instant it serves Until now, my invention most requested by the organizers of the congresses has been "the artificial heart oxygenator of the blood", which has been considered perpetual motion by the Italian patent office. However, even this invention has not found financiers, because multinationals do not make inventions that go against their commercial interests regardless of the existence of a patent. They probably prefer to sell pacemakers, as other multinationals prefer to sell oil, others the current pumps, petrol or battery cars, others the current planes, the current boats and ships with heat engines, the current agricultural tractors. It is possible that statesmen and public legislators, including those of patents, which depend directly on the United Nations, together with international judges, do not realize that with their laws, which protect the industrial property and trade of public patents towards multinationals, do they stimulate opposing interests to those of a sustainable economy?

These internationally legalized conflicts of interest cannot be fought unless interactive and transparent inventions and companies such as SPAWHE S.P.A. that finance the demonstration prototypes, which the public bodies, not doing their duty, ignore with the consent of the governments. What are the current rating agencies for, which give negative scores to indebted and inefficient countries? These are private companies that only protect capitalism and world stock exchanges. They have not noticed that since the beginning of the industrial era we have mistaken the primary energy and purification sources and for the same reason world science has

not been able to add the Lorentz's thrust to Newton's to conquer space.

It should be remembered that the abbreviation SPAWHE, coined by myself in 2014, means Synergic Plants, Artificial Welling, Hydroelectric Energy, today it should be extended by including the inventions developed and published after 2014, but the word Synergic already indicates the exploitation of interactive systems that world public and private science has underestimated. I cannot modify all the written and published articles bearing this abbreviation, nor can I specify that the word hydroelectric refers to compressed hydroelectric with the recycling of water which has nothing to do with current hydroelectric power plants which, like the thermal and nuclear energy, they only produced disasters.

I think my inventor activity ended with these latest inventions. I also think that they are not all flour of my sack and that the study of these solutions has strengthened my faith in a superior entity that governs the world. The world is so perfect that none of our inventions can improve it. I believe that the task of the inventors enlightened by this faith in a higher entity is to correct all the wrong inventions of the past that do not close the cycles they open. By doing this work, inspired by natural systems and the laws of physics, I produced the sequence of protective inventions of the environment, which gradually allowed to bring together the thrusts of Newton and Lorentz, which not even NASA, dominated by thermal scientists and Nuclear has never managed to put together. My inventions are not only mine but also of the scientists of the past who have separately experimented very important laws, especially physical, on water, air, gravitational force, electromagnetism, which I was able to put together without funding, because the experiments have already made them. Physics does not need chemistry, thermodynamics and nuclear power to produce energy.

I have always said that I am a simple designer and installer

of industrial and environmental systems. I only did the design work with the few means that allowed me my modest pension. I cannot also proceed with the installation of the systems, above all, due to the absence of institutional customers, especially regarding public utility systems. There was no point in participating in 2015 and 2018 in European social competitions because environmental and energy problems were not considered social by the examining boards. These competitions are authentic sweepstakes lottery (http://www.spawhe.eu/the-european-social-innovation-competition-lottery/)

This is the summary of the latest invention that I propose.

The Italian patent filing no. 102020000000031 of 03/01/2020, entitled “aerospace and submarine transport system with primary and induced interactive global linear motors”, although it is only an intellectual patent, allows us to touch first hand a very important advancement of the state of the art in systems of transport worldwide, as hydroelectric motors, also intellectual patents, have turned into linear motors, changing the shape and also the substance. In fact, the shape of these motors has become elongated cylindrical by incorporating the high pressure tank into the low pressure one, while the external walls of this have become sliding tracks of the permanent magnets, which are used to develop the induced currents. Therefore, an external solenoid was also added to the low pressure tank, so that this solenoid can also produce the Lorentz thrust. The aforementioned patent dealt with large aerospace means of transport, while in this the undersigned deals with small means of transport. Looking at figures 5, 6, 7 of a car of the future which represent the longitudinal and transverse sections, we can see that under the passenger compartment floor was installed in series with the interactive global linear motor and an electric turbofan, also equipped externally with sliding tracks and solenoid. Therefore, this group will simultaneously produce the thrust

of Newton and Lorentz. In addition, it will be pivoted in the center and can tilt about 20 degrees. The four-wheel drive of the car, equipped with driving torque applied to the periphery of the wheel rims, will allow land transport, but they will be used above all to get the vehicles off the ground, which obviously, with the thrusts of Newton and Lorentz, will be able to rise from the common urban roads and fly into the atmosphere without using fuels. The overall thrust that will make the cars move in the Earth's atmosphere and in space will be due to the result of the horizontal and inclined one of Newton and Lorentz produced by the thrust group placed under the floor and by the vertical one of Lorentz, produced by the group placed at the interior of the passenger compartment. The plan size of the cars of the future will be the same as the current one but the shape will resemble the current minibuses, developing in height. To climb on them we will have to climb some steps. These cars, by changing the wheels, will also be able to work the land, being much more powerful than current agricultural tractors, thanks to the interactive energy between water, air and electromagnetism, which costs nothing. Obviously, if we use cars as agricultural tractors we will have to disable Newton's thrust which would raise too much dust. These cars will deactivate Newton's thrust and reinforce Lorentz's, even when used by the firefighters to stop permanently on fire outbreaks, transporting tanks full of water but externally equipped with permanent magnets and a solenoid that will produce the vertical thrust of Lorentz, to cancel the weight, balancing the weight force which is equal to "m x a" with the opposite force equal to "m x aL". The cars of the future can also be used to enjoy the sea and fish, quickly escaping the rough sea. Obviously, as for working the land, putting out fires, an accessory application will be needed. In fact, they can inflate two air cushions in flight on which they will rest on the water of the seas and lakes. These air cushions will serve to slide the car over the water and make it take off with the push of Newton and Lorentz. In flight, the cushions will deflate and roll up automatically in

two special containers placed laterally to the global linear motor placed under the floor of the passenger compartment. Current cars are a waste of fuels and technologies that will never lead us to these interactive solutions because having the wrong primary source of energy, they cannot overcome the current state of the art. Only by demonstrating the technical and economic inefficiency of today's world energy systems, including batteries, will the current multinationals that govern and pollute the world be scrapped. But it is necessary that the oppositions also begin to understand interactive systems and so far, they have not understood them because those who govern and those who oppose attend the same schools of scientific training. They only diverge on political and social issues, while the problem is above all, scientific.

DESCRIZIONE

Before starting the description of this patent filing, I consider the following premise necessary: "Nature, by thickening the atmospheric air, has given us the tool to slow down the fall of bodies and to counteract and overcome it if we want to overcome the gravitational force, allowing us to produce the compressed hydroelectric primary energy that directly produces the drive torque at the output of a turbine connected to a current generator that produces direct electromagnetic current, which produces Newton's thrust by means of propellers and fans and the inductive and induced Lorentz one by means of permanent magnets and solenoids. The most difficult energy to discover was the primary one with the recycling of water, which also allows the best energy gain thanks to the Pascal principle which states that the pressure of a compressed gas (air) expands in all directions and therefore if it cannot expand it exerts static pressure on the surface of the liquid (Water), referring to the Torricelli principle which states that the velocity "v" of water leaving a hole subjected to pressure "h" is equal to the square root of 2gh, where g is l 'gravity acceleration. This is the speed

of the water that passes through the turbine and moves the shaft of the current generator. However, the invention that was missing to exploit the same amount of water indefinitely, and to allow energy and purification gains was “the pump with the double separate supply up to the impeller”. In fact, this pump, having two clearly separate supplies that meet only in the rotating impeller (not before) allows to insert the water discharged by the turbine directly into the internal recycling circuit of the autoclave without having to overcome the opposition of the static pressure. But the same amount of water that enters low pressure is simultaneously expelled at the same time by the pressure “h” of the autoclave which makes it enter again into the hole that feeds the turbine with the Torricelli speed, due to Pascal’s principle or impenetrability of bodies. This allows an immense energy gain, which does not require fuels, electrolytic materials or active radios. It only depends on the pressure and wear of the materials that make up the pump, the turbine, the turbofans that produce Newton’s thrust and the mechanical motion transmission organs to the wheels or marine propellers and to the permanent magnets that produce the induced currents, which they produce the Lorentz thrusts. To this we must add that every time the water that produces the energy passes through the autoclave it absorbs a greater quantity of oxygen according to the laws of Henry and Dalton, therefore these systems can also be used as purifiers of polluted water. It is no coincidence that the degree of water pollution is measured in BOD which means the need for dissolved oxygen. Isn’t it ridiculous that we consume a lot of energy today to oxygenate the water, while the oxygenation of the water could be a secondary effect of energy production? Who should answer for these worldwide mistakes? Certainly not the patent offices that have declared the energy systems proposed by the undersigned “perpetual motion” and utility model the pump with the double separate power supply up to the impeller. In my opinion, public and private world science must respond. For a matter of intellectual honesty, otherwise the legislators will continue to believe

indefinitely in the fable of “perpetual motion” that does not exist, but if it existed, it could not compete with interactive energy, which does not exist only because of the inability of science public and private, which together have not been able to extract it from nature “.

To purify the environment it is essential to identify the interactive principles between water and air. It also serves to design a rational terrestrial and spatial transport system. In fact, gravity and atmospheric pressure hinder the lifting and movement of the masses. The thrusts of Newton and Lorentz have been legislated for centuries, but in air transport only the first are used because of the difficulties encountered by science in inventing a space-saving system that produces sufficient electricity on board the means of transport to feed both thrusts, which together, with their accelerations, would zero the weight of the mass, which is a vectorial force, according to the relation F = m * (a – aL – aN), where “aN” and “aL” are the respective accelerations of Newton and Lorenz in the opposite direction to gravity. This problem was solved with the invention of the “primary and induced global interactive linear motor”, which is a complete system, which exploits air pressure statically, one-way, circulates pressurized water through a turbine with current generator and uses a pump with the separate double supply up to the impeller, which recycles the water discharged from the turbine by inserting it again into the internal recycling circuit of a pressurized autoclave in the form of a tube, placed in series or in parallel to an electric turbofan, while the primary electric current produced by the generator feeds the turbofan motor and moves the permanent magnets of two parallel or superimposed inductor circuits, concentric to the autoclave and to the turbofan, induced currents are also produced in the external enclosures of the autoclave and turbofan they generate two Lorentz thrusts which add up to the Newton thrust of the turbofan. Therefore, the electric turbofan becomes an induced interactive linear motor that simultaneously produces

the thrust of Newton and Lorentz, while the primary plant, in addition to feeding the inductor circuits, produces in its own armature the Lorentz thrust which is added to the two thrusts of the turbofan.

Since described in the summary, in the near future, the simplest and most economical way to produce energy, purification, and above all, to move on the earth, in space and in submarine environment will be with the “primary linear and induced interactive linear engines”. This is the name I gave to these complete energy and collateral depurative systems, autonomously energetic, that do not require public infrastructures such as roads, bridges, viaducts, tunnels, railways, subways, energy distribution networks. i don’t think it’s a coincidence that Newton’s thrust opposes the flow of air that enters the turbofan and that it goes in the same direction as the Lorentz force, if the flow of the permanent magnets that we use to produce the induced current, goes into the same direction as the air passing through the turbofan. In fact, even the electromagnetic force of Lorentz is opposed to the magnetic flux that generates it. On the other hand, these laws have been widely tested even if no one has thought of sliding permanent magnets outside the turbofans and creating the air gap and an induced outside solenoid. And to do the same thing even outside the primary circuit producing compressed hydroelectric energy and the compressed air and water tanks that feed it and that recover water and air in an infinite recycling cycle that does not it leaves nothing out of primary energy sources. More than a hundred years after the important discoveries of electromagnetism, it can be said that apart from the Maglev high-speed trains that use them only partially, there are no practical applications of linear motors, which instead have great potential if they are used in conjunction with production of primary compressed hydroelectric mobile energy and to the cylindrical surfaces of electric tanks and turbofans.

World science on planet Earth has made the mistake of not properly investigating and exploiting the energy present in the environment produced by gravity, which has thickened the air to allow us to statically exploit the atmospheric pressure. On the other hand, nature uses the simple atmospheric pressure on the water to produce sea currents, artesian wells, rivers, waterfalls, teaching us that it is convenient to use the force of the water under the pressure of the air which can act even statically, taking advantage of its own elasticity. World science has not perfected this system technologically with new and simple inventions. The undersigned did this by first inventing the “artificial welling” (patent filing 102014902290390 of 09/03/2014) and then “submerged hydroelectric energy” (Italian patent filing 102014902298581 of 06/10/2014) and subsequently, ” the pumps with the separate double supply up to the impeller “(Italian patent filing 102015000048796 dated 07/09/2015) which would allow to exploit the compressed air pressures in the autoclaves to produce fixed and mobile electromagnetic energy. An invention is considered as such when it has the requirements of novelty, inventiveness and industrial applicability. Above all, it must not be easily understood by the experts. Obviously, if the experts do not understand them or pretend not to understand them in order not to scrap the previous inventions, they do not even include the patent offices, which very quickly declare that they are contrary to the principles of energy conservation. The current system of managing and granting patents, above all, of public, utility is obsolete and against the interests of the environment and the world population.

Very strangely, the only energy that has never been produced on planet Earth are the submerged and compressed hydroelectric ones, which would dissolve oxygen in the water on Henry’s principle. These energies do not consume and do not transform primary sources (water and air), they only wear materials that can be regenerated with fusions and mechanical processing. The

primary hydroelectric energy compressed with water recycling, mounted on the means of transport, through the current generators can produce both the reaction thrust and the electromagnetic thrust without any counter environmental indication. Today, it should be considered a fortune that the undersigned, has already proposed a sustainable aerial and space navigation system, based on Newtonian thrust, through the realization of thrust tunnel with electric fans and turbo compressed air injections. From this system it was natural to add the electromagnetic thrust to be used above all in the vacuum to the electric Newtonian thrust tunnels. But, as anticipated in the summary, it is clear that the electromagnetic thrust can also be used in the atmospheric environment, if the way of flying is changed, creating a unique air navigation system that is both terrestrial and spatial. This system would not only not pollute the environment, but would also be cheaper and safer than current aircraft that use fuels and aerodynamic principles to float in the atmosphere. In fact, if the primary energy becomes the compressed air exploited statically and the principle of impenetrability of the bodies, the energy vector will be the simple incompressible water that has a density about 1000 times higher than a combustion gas. It means that for the same flow rate and pressure on the means of transport we will produce 1000 times more power than that produced with fossil and chemical fuels, with the same flow rate as the carrier fluid, in addition by recovering it and inserting it back into the energy circuit. In fact, scientists should know that power does not produce heat, but the flow rate for pressure for the density of the fluid circulating in the turbine.

What scientists today still do not understand are that they focus only on mathematical expressions and not on the practical aspects, is the fact that the power of the centrifugal pumps can be modified to recover the water that produced the energy and insert it back into the pressurized recycling circuit, exploiting the depression that the

centrifugal pump produces in the center of the impeller. It does not matter that the recycling pump must circulate in the pressurized autoclave tank a much higher quantity of water since this circulation absorbs very little energy, being the circuit very short, moreover, working with balanced pressures on suction and delivery the pump absorbs energy of a closed circuit, even if a branch of the circuit is open to relieve the pressure at the turbine outlet. What is important is the fact that the water inserted more into the impeller than the volumetric capacity of the circuit is immediately expelled from the static pressure of the autoclave due to the principle of impenetrability of the bodies. This expulsion done at high pressure does not cost energy, as it is produced by the elasticity of the air, in a one-way water circuit, which first passes through the turbine, then a tank at atmospheric pressure and returns through the second supply of the pump back into the pressurized autoclave (2). This circuit produces the best possible primary energy on planet earth, we can also bring it to space because it does not consume water and also recovers the air that comes out of the tank vent at atmospheric pressure (1), as seen in Fig. 2In this circuit the main supply of the pump continues to recycle its pressurized flow rate with the same direction of flow, without varying the volume and pressure of the air cushion of the tank (2) (checking the revolutions of the circulation pump and the autoclave level probes). We know that due to the principle of impenetrability of bodies, water would not have entered the pressurized circuit of the autoclave (2) if the outlet that powers the turbine (3) had not been opened at the same time, but we also know that if it did not exist the depression in the center of the centrifugal impeller of the pump (6), and that if the two inlet streams were not clearly separated until the impeller inlet, the system would not work as well.

However, having specifically created these three conditions (ignored by science, by the manufacturers of pumps and turbines) in the design and patent filing phase, there is no

doubt about the operation of this system that produces free electromagnetic energy through the coupled current generator to the turbine, using the one-way principle of the impenetrability of bodies, but also those of Pascal and Torricelli lead to the same conclusions. Why are the scientists of world physics silent by continuing to insist only on thermal and nuclear energy? Science must above all be transversal and take advantage of the opportunities that technology and research also offer by expanding the functions of man-made plants.

Today, thanks to the revolutionary ability of the diodes and power thyristors to make the voltage and frequency of the power supply line independent of those that power the motors, it has made it possible to use three-phase asynchronous motors powered no longer at fixed voltages and frequencies but finely variable so as to accurately adjust torque and speed. Therefore, by feeding a pump with variable revolutions with separate double feeds up to the impeller, which is the heart of a very complex system that I called “interactive global linear motor”, all the connected electric motors are automatically adjusted simultaneously and therefore also the induced currents and consequently also the thrusts of Newton and Lorentz.

Today, we no longer need the electricity distribution network and heavy power transformers. It is worth noting that the asynchronous motors can be powered with a symmetric polyphase system at any voltage, and can also be used as current generators if coupled directly to the pumps used as hydraulic turbines, as provided by myself in the submerged electricity production and compressed. Today, a three-phase motor, built in large series, can have powers ranging from hundredths to a few tens of thousands of kilowatts. The frequency and speed of rotation is practically constant as the speed difference, from empty to full load, generally does not exceed 4%. Having a reversible operation, like all electric machines, it can also

function as a generator, and also as a brake in the landing maneuvers of the planes of the future.

In modern physics, the resistance that the body opposes to all the variations of its state of quiet and motion is defined as mass.

The word mass indicates a property of bodies, it is commonly associated with the meaning of quantity of matter. Weight is instead a force. A body, if it is not subjected to forces, maintains its state of motion, that is, if it is in motion, it continues to move with the same speed and in the same direction, if it is stationary it remains stationary. To change the state of motion of a body we must therefore exert a force on it. The mass of a body can be defined as the "reaction" that a body opposes to the action of a force. It is precisely the inertial mass m that appears in Newton's famous formula F = ma. F indicates the most generic of the forces, and "a" is the acceleration (speed change), which produces the force on a body, not bound, inertial mass "m". With the same force, the greater the inertial mass of the body, the smaller the acceleration. That is, the greater the inertial mass of a body is more difficult to change the state of motion. The greater the inertial mass of a body, the greater the force applied to put it into motion or change its speed and direction of motion must be.

But as legislated by Newton himself, all material bodies attract each other. This attractive force is the force of gravity (gravitational attraction), and is proportional to the product of the gravitational masses of the attracting bodies. Considering that on planet Earth the main mass is that of planet Earth, the force of attraction suffered by all terrestrial bodies has been called weight force. The objective of this patent filing is to overcome the weight force of the bodies by producing energy internally within the bodies themselves, exploiting all the known energy principles and adding them to act in the direction of motion.

The undersigned, with the invention of compressed hydroelectric energy, which is based on the one-way circulation of incompressible water, the exploitation of the static pressure of compressed air and the principle of impenetrability of bodies, has identified the terrestrial application perfect of the principle of conservation of the masses, which does not destroy or transform matter. It only borrows it and returns it with the same chemical composition because clean water cannot absorb more gas than those already dissolved in it, according to the laws of Henry and Dalton.

Who provides the energy in this system is the flexibility of the air trapped in a small volume that can only expel the incompressible water, which is forced to pass through a turbine and return to its initial state. In fact, the water introduced in low pressure through a pump equipped with a second separate supply that reaches until to the rotating impeller, the volume V of the material does not change. The mass is not created or destroyed, but as it passes through the turbine connected to the current generator, it transforms the pressure energy into electricity. In fact, the pump motor, working with balanced suction and delivery pressures on one of the two feeds, works with a very low head, and a very low absorbed power. In fact, it allows the multiplication of the energy contained in the mass that passes through the pressurized autoclave. Electricity, transported in electric cables, can be used in a different place from where it was produced, for industrial, civil uses, or it can be used to move the same means of land, sea and air transport using the principle of Newton’s or Lorentz’s reaction (as happens in Maglev levitation trains).

Today, there is no energetically autonomous electromagnetic mobile technological mass, but all the ingredients to achieve it exist, since the electromagnetic principles that lead to the thrust of Henrik Antoon Lorentz have been identified and developed. Only the primary source of non-exhaustible powerful

energy was missing (hydroelectric compressed with the recycling of water), already identified by the undersigned and already applied virtually, in terrestrial applications. Unfortunately you don’t realize.

It is obvious that changing the way of producing energy changes the entire world development model and requires a different scientific organization of work in all currently developed systems. Having undersigned already written abundantly about the changes to be made in energy and purification systems, including land transport, he finally addresses the most complex aspect which is that of the future way of navigating in the atmosphere and in space. Even these already partially developed but only with Newton’s thrust. In fact, in these two environments we can no longer rely on aerodynamics, studied since Leonardo da Vinci times. We must rely on the management of the physical and electromagnetic forces produced by man and of the existing natural ones which oppose or facilitate the movement of bodies.

The state of the art cannot advance quickly and efficiently and sustainably in this sector, which draws energy systems only from thermodynamics and nuclear power. Without compressed fluid dynamics, the solution to produce electricity on board the aircraft and to replace turbofans powered by combustion gases with electric ones could not have been conceived. Nor could this update of the state of the art be conceived, which creates the Lorentz thrust on the external wall of the turbofans and fluid-dynamic systems that produce primary energy without fuels, like the previous version, but modified in shape to make them more suitable. In fact, the undersigned, continuing to develop his inventions virtually, believes that for air and space transport, the best solution is to superimpose electric turbofans on compressed hydroelectric plants developed linearly in an elongated cylindrical shape, and to use the external walls of the two systems as sliding tracks of the permanent magnets, which

serve to develop the induced currents, also adding the external solenoids. In essence, these systems are “interactive linear global motors” that produce together with primary energy also the electromagnetic thrust of Lorentz, which adds up to that of Newton’s reaction of the turbofans, also modified, so that they produce the double thrust, as it can be seen from the section drawings of figures 1 to 7, where the thrusts of Newton and Lorenz are indicated respectively with the abbreviations FN and FLwhile the driving force due to the wheels touching the ground is indicated by FM.

In the system in question, both the thrust of Newton and that of Lorentz, that the driving force to the wheels depend on the small energy that the pump consumes with the double separate power supply up to the impeller that keeps the whole system in operation, operating all the time , recovering the mass of water discharged from the turbine at atmospheric pressure, recycling it and inserting it back into the pressurized tank that feeds the same turbine. This circuit consumes energy as a closed hydraulic circuit but produces energy as an open hydroelectric circuit (moreover pressurized for free by compressed air, which is exploited statically, without the expansion and compression of heat engines that waste energy and pollute the environment). The higher the pressure we will develop in the autoclaves built into the aircraft, the greater the driving forces on the wheels, the newton’s and the induced currents that will produce the Lorentz thrusts.

If we think that the pressures produced in the current combustion chambers of thermal engines and turbofans, at most they can reach the pressure of forty bar with the density of the combustion gases about a thousand times lower than the water that would circulate in cold and with very static pressures. higher, we can only imagine the power that we could develop with the “primary and induced interactive global linear motors” in fact, the water is incompressible and the compressed air can also be compressed at thousands of bars. We

need to find materials that can withstand these pressures, but even with existing materials we can take advantage of pressures higher than those produced by turbofans that use combustion gases, without polluting and without paying for fuels.

Working in watertight compartments, the state of the art is progressing very slowly, hampered, above all, by those who have invested in partial inventions and by the legislators and governments that have allowed it. Today, these interactive inventions are also hampered by the conflicts of interest created by the sale of patents by public researchers to private industries, which also involve world legislators and national and international judges, which should condemn governments and the huge crimes of omission that are committed Instead, the crime of omission has become the daily bread of the entire world ruling class. Today inventions are widespread for a fee by scientific editions and congress organizers, while patent deposits have to pay filing and maintenance fees in all countries of the world even if they do not find financiers. It is clear that with the current laws on industrial property and the current partisan scientific diffusion system, without international guarantors, only multinationals and large public bodies could afford to produce important inventions for the future of humanity. Unfortunately, for these multinationals and public bodies that do not do their social duty, the undersigned has realized that they have been mistaking the fundamental principles of world energy since the advent of the industrial era and that the state of the art, until proven otherwise, it can even advance virtually, without paying all the taxes that world power centers demand. These inventions cannot be hidden forever.

The least cumbersome version to produce compressed hydroelectric energy is the one that the undersigned used (virtually) in the wells in a patent filing of 11/08/2016 and in the oxygenator heart of the blood deposited on 29/05/2018,

while the storage of flight system patent with electric jet fans took place on 01/06/2017. Although all these solutions have all been declared “perpetual motion” by incompetent bureaucrats, with the silence of science and legislators, these solutions have represented the starting point for the conception of “primary and induced interactive global linear motors”. This solution is the most suitable for adding the electromagnetic thrust to the reaction thrust tunnels, for the simple fact that it develops vertically together with the reaction thrust as seen in figures 5, 6, 7, where the coupling is seen in Lorentz and Newton thrust series.

It is the duty of the undersigned to update again the virtual state of the art of terrestrial and air transport systems, waiting for the world institutions to create the conditions for designing man-made plants globally, not relying only on nuclear, aeronautical specialists, thermal, but putting together different experiences in order to identify the synergies that have escaped, which until now have also prevented from putting together the thrust of Newton and Lorentz.

According to Maxwell’s equations, a variable electric field induces a magnetic field in the surrounding space and a variable magnetic field induces an electric field. The combination of the two effects gives rise to the electromagnetic wave that propagates in space transporting energy even after the original particle has stopped oscillating. In fact, the wave has a sinusoidal shape and does not require a material support. But, for the undersigned, as described in the recent patent filing entitled “aerospace and submarine transport system with primary and induced interactive global linear motors” (Italian patent filing no. 102020000000031 of 03/01/2020), if we want to create a stable and safe aerospace transport system, especially in the initial phase, in order not to endanger the lives of crews and passengers, we must start from the organization of the work of

the airports. We must reinforce natural electromagnetism by creating a kind of overhead railway, where the cars, equipped with autonomous energy, are also pushed from the initial station and push each other in the air while maintaining optimal distances. This sort of air railway will cost much less than the current land railways that need bridges, viaducts, tunnels and the electrification of the entire railway network.

Obviously, small private means of transport cannot be managed by airports, nor can they enjoy the fixed electromagnetic thrust produced underground, therefore it was necessary to study a different solution that also uses the drive wheels, to increase the initial thrust needed to take-off of the means of transport. For this reason, this update of the hydroelectric car was born, which also becomes a steering wheel and much more functional, solving in addition to environmental problems also a large part of the structural ones. It will not be convenient to build large super roads, tunnels, railways, not even locally, because energy will cost little and infrastructure will cost a lot, both to build them and to do maintenance.

The formula that binds electromagnetic waves to energy is $E = c \times B$, where c is the speed of light and B is the magnetic field.

The magnetic field is due to the movement of electric charges. It depends on the size and strength that the conductor passes through. It is measured in Tesla (T = Weber / m^2), where Weber is equal to the magnetic flux which, passing through a loop, produces an electromotive force equal to 1 volt when it is uniformly reduced to zero in 1 second.

The electric field is related to the potential difference in a conductor. It is measured in volts / meters.

Without going into the details of the calculations of the

electrotechnical design which will be very complex for the quantity of the components that will produce induced currents and for the immense quantity of the solenoid wires, the choices of the voltages and the frequency of the currents, it is worth remembering the fundamental concepts of electromagnetic induction.

For the Faraday-Neumann – Lenz law. The value of the induced electromotive force is equal to the ratio between the variation of the flux of the magnetic field and the time required to have this variation ($Ii = \Delta\Phi / \Delta t$).

In the system proposed by myself to fly in the atmosphere and in space, both the windings of the electric motors of the turbofans, and those of the pumps, both those of the current generators connected to the turbines, and the motors that will make the magnets move, both the water itself, which has a bipolar molecule that polarizes, will be simultaneously found inside the magnetic field and the solenoids of the induced currents that will be and produced outside the turbofans, and the cylindrical tanks in which the water that produces the water circulates. primary energy by means of the product of the pressure for the flow rate for the mass density ($E = P \times Q \times \rho$).

In this system, all these electromagnetic fluxes can influence Newton and Lorentz thrust differently by regulating the direction of rotation of the propeller and impeller motors, while unwanted functions can be isolated from the magnetic flux by incorporating the non-magnetic materials, as would return paths of the permanent magnets, which can be inverted by changing the direction of the electromagnetic thrust.

As we know, the technological definition of the current linear electromagnetic motors is as follows: “they produce a force instead of a torque, as they were conceived by imagining to unroll the rotor and stator of the current electric motors.

The most famous application of linear electromagnetic motors is that of electromagnetic levitation railway lines (Maglev), where the inductor is the locomotive itself, while the induced is a solid steel continuous sheet of the length of the entire railway section.

In Maglev, the inductor (locomotive) consists of a flat magnetic structure on which a winding powered by a symmetrical three-phase system of voltages with “p” pairs of poles, frequency “f” and polar pitch “t” is placed. The synchronism speed is v = 2 f t. By appropriately adjusting the frequency and the polar step, train speeds of over 500 km / h can also be obtained. This system was created only to connect railway stations placed on linear paths without path deviations due to the difficulties in changing the direction of travel as occurs in current railway exchanges Infact, the inductor, in its rectilinear movement, cuts the conductors of the armature generating f.e.m. and induced currents. These currents, immersed in the same magnetic field that produces them, are the seat of electromagnetic forces that push the armature (fixed to the ground) in the same direction as the magnetic field, but with the opposite direction. In the case of the locomotive, since there is not the rotation axis of the armature but two inductors that balance the thrusts on it, linear thrust is obtained without physical contact between the metal masses of the inductor locomotive and the induced sliding track.

Energy savings and higher speed than the current trains in the maglev take place because the frictions between the mechanical parts and between the rails and the wheels are eliminated due to the fact that the two inductors are attracted to the armature but simultaneously repel each other. Therefore, the air gap between armature and inductor remains constant and the locomotive moves linearly parallel to the armature track.

The Maglev solution has the main defect which is that no changes in direction can be made and the making of curves is

also a problem due to the centrifugal force of the masses. But the main flaw is that since there is no system to produce sustainable energy on board the locomotive, the power supply must take place from the outside, as is the case for current electric trains. Although it is possible to power only the section of track involved in the passage of the train, the infrastructures external to the means of transport still involve significant costs and a considerable technological commitment, without solving the problems of sustainable production of clean primary energy, both in power plants than on board the means of transport. The ideal solution is always the one that would allow the Newton and Lorentz thrust to be produced without the structural costs of bridges, tunnels, thermal power station tracks and related management and maintenance costs. Above all, these structures are subject to earthquakes, like all fixed structures and can be damaged even if they do not collapse

Today, unfortunately, due to the divisions of scientific, economic and political technical skills, all inventions are incomplete for one reason or another and all compete with each other, not to find global solutions, but specific solutions to individual problems, including land, road, rail, air, marine and submarine transport, but also in other sectors there is the same competition, such as the production of agricultural vehicles and earthwork, which have not solved the main problem that is production fixed and mobile of sustainable primary energy.

Sustainable primary energy production had to be the first problem to be solved to start the industrial era, instead it became the last. It is better to write these things also in the filings of the current industrial patents, where before talking about the inventions it is necessary to take stock of the state of the art of the sector concerned. But to take the exact point of the state of the art, one should also investigate the reasons why world legislators have not

encouraged the filing of intellectual patents that would have opened the mind to other inventors before embarking on wrong paths, especially energy. Choices of the wrong primary energies have created disasters of all kinds, including global public debt and current conflicts of interest that prevent real sustainable development and also a sustainable race to conquer space, which cannot begin with the energy that it runs out because it cannot be renewed simply and naturally.

A complete system that produces electricity on board does not need to build a fixed armature on the ground. The non-rotating global linear motor can be made up of permanent magnets circulating linearly in the external grooves of the tube that contains the fluid-dynamic system by mounting the same magnets on a mechanical transport roller chain equipped with fins on which the magnets are screwed, after inserting an insulating gasket, driven by one or more electric motors and gear wheels that they circulate linearly along the entire length of the hydraulic system, which in this way also becomes an inductor of electromagnetic energy. In fact, by incorporating in the return slots the chain that transports the magnets in a magnetically insulated tube, we can create a continuous one-way magnetic flux, which interacts with an external solenoid to the fluid dynamic system producing the Lorentz thrust. We do not need to make two opposing inductors and the sliding track in the center along the entire path. Not needing the sliding track, this system can also be implemented in the airspace. While on planet earth it is better to combine it with Newton’s thrust to travel in the atmosphere.

If we hypothesize to divide the external circumference of the containment tube of the turbofan and the pressurized hydroelectric plant below with 36 external slots for magnet sliding (one every ten degrees) we will have 18 rows of permanent magnets that go down and 18 that go up in the inductor circuit. We will only use non-isolated rows. In this way we will produce two overlapping but separate inductor

circuits, as they perform different functions internally: One produces the Newton thrust and another the compressed hydroelectric energy which is the primary energy of the entire plant. The armatures of these two different superimposed systems, on the other hand, will consist of simple long solenoids when the entire plants and produce two Lorentz thrusts that go in the same direction. There is no need to have the induced armature fixed to the ground as in the Maglev as they always flow in the same direction to infinity. The total thrust will depend on the quantity of the components used, their size, their speed and the size of the external induced solenoids, according to the laws of Newton, Faraday, Neuman, Lenz, Lorentz.

The interactive energy that would protect the environment is much cheaper than that which has polluted it irreparably. But the undersigned has already written these things in many publications. In this intellectual patent filing, which is the only form of patent that can be filed by an inventor unrelated to the centers of power, although this form of filing under current laws does not grant rights to inventors who cannot pay meaningless taxes (only inventors have to pay taxes even if inventions do not produce any income), the simultaneous realization of the thrust of Newton and lorentz on air transport means that has never been imagined. In addition, with an autonomy of almost infinite navigation autonomy, which does not depend on the energy source but on the wear of the materials that make up the system.

In this patent filing we speak above all of Lorentz’s thrust, of the reason why it must be added to that of Newton also in land transport systems. Not just to navigate space. In fact, the Lorentz force being a vector force based on electromagnetic waves, reduces the effects of gravity and the weight of the aircraft will no longer be P = m * a but equal to P = m * (a – aL – aN), where “a “Is the acceleration of gravity” aL “is the acceleration produced artificially with

Lorentz’s force)” aN “is the acceleration produced by Newton’s force. If “aL” and “aN” are powerful until canceling “a”, the weight (ie the force with which the aircraft is attracted to the earth) becomes zero.

The Lorentz thrust is expressed with the following vector product: $\vec{F} = q\vec{v} \times \vec{B} x \sin \phi$, where q indicates the electric charge in Coulomb, v is the velocity vector in m / s with which the electric charge moves, B is the field magnetic in Tesla to which it is subjected, ϕ is the angle between V and B. If we consider that the Lorentz force in Newton (Kg xm / s^2) is exerted by the two overlapping external solenoids that enclose the electric turbofan and the primary hydroelectric energy production plant, we can realize the direction of this force by ideally putting the right hand on a wire of the coil of the solenoid, where our fingers indicate the direction of the current and the thumb indicates the direction of the magnetic field. The Lorentz force is always perpendicular to the current velocity vector (qv) and to the magnetic field (B), which in this case, are perpendicular to each other and express the maximum force, being the sin of the angle of 90 degrees equal to “1”. Therefore, Lorenz’s force follows the spiral of the wire parallel to the longitudinal development of the solenoids that surround the electric turbofan and the external tube in which the compressed hydroelectric primary energy is produced.

Obviously, it is not easy to accurately calculate the force produced by an interactive global linear motor because within the solenoids that express the final force there are many different materials, with different proportions and arrangements (iron, copper, steel, light alloys, water, air). Some of these elements move continuously, such as permanent magnets and water. All these elements have a different magnetic permeability, which should be inserted in the Biot and Savart formula to calculate their own magnetic field modulus.

As an indication only, this formula is given: B = m x i x / 2π x r, where: “m” is the magnetic permeability, “i” is the current intensity, “r” is the distance from the wire traveled by the current.

To simplify the concepts, the induction vector module gives only the formula of the magnetic field of a common solenoid: B = mx N i / L, where “m” is the magnetic permeability, “i” is the current intensity, “N “Is the number of turns,” L “the length of turns.

If the solenoid is very long with respect to the diameter of the turns, as in the case of global linear motors, the magnetic field created inside is parallel to the axis of the solenoid. The direction of the magnetic induction vector is that of the axis while its direction is that of a screw that rotates clockwise (right-handed screw) while it is screwed in the direction of current I.

Beyond the formulas that express the basic scientific concepts, what is important is the fact that today we have the possibility to vary the magnetic field and the Lorentz force, by varying the circulation speed of the permanent magnets, or by varying the engine rpm of the electric turbofan, which are powered by compressed hydroelectric primary energy, which is produced by statically exploiting the pressure of the compressed air and the principle of impenetrability of the bodies, which expels the water that enters the pressurized recycling circuit in excess of a very simple autoclave by means of a modified pump which has a second power supply, in addition to the recycling one, which makes the water discharged by the turbine which produced the electricity return into the circuit. The division of the water flow between the two parts in the same system that falls through the modified circulation pump, can be assimilated conceptually to the division of the atom, but has no environmental contraindications, indeed it improves the quality of the water because every time the water re-enters the pressurized

autoclave absorbs a greater quantity of oxygen due to Henry's law.

Obviously, the scientists and industrialists who produced terrestrial energy with fuels and the push to exit the atmosphere with chemical rockets or thermal gas turbofans, have not been able to advance the state of the art in the way indicated by myself because the technologies and scientific principles used by fuels are not compatible with electromagnetism as is the kinetic energy produced by a hydraulic turbine, whose current generator is powered directly by the turbine shaft itself, without unnecessary thermal passages.

To produce the Lorentz thrust from fossil and chemical fuels, the necessary quantity of fuel must be transported on the aircraft, which, in addition to having an economic cost, also has a volumetric mass and weight. In addition, it is necessary to go through energy transformation processes that produce steam or combustion gases, expansion and compression cycles are unnecessary pollutants and expensive compared to energy produced cold with the recycling of the same amount of water, which having a density about a thousand times higher than a combustion gas, at the same pressure (static) and weight flow it produces an electrical power about a thousand times higher than any gas. In addition, fuels run out while compressed hydroelectric energy is the only renewable energy that can be produced independently, recycling both water and air which always return to the initial state.

As stated by Maxwell, Faraday, Ferraris, Lenz, Lorentz, and demonstrated in many practical applications, we must assume that if we slide permanent magnets into the slots of the external wall of the turbofan and we create an air gap and a second external wall that incorporates a solenoid, The moving magnets become inductors and the solenoid becomes an induced armature that produces an induced current that opposes the variation of magnetic flux that generates it and therefore

also produces the Lorentz thrust together with that of Newton. This is what is shown in fig. 1, which also inspired figure 2, where, instead, the Lorentz thrust is made by a special solenoid that even incorporates the primary source of compressed hydroelectric energy, specially developed in concentric tanks pressurized in low and high pressure, which as written, is the solution already used by myself, in unnecessary (for the world ruling class) deposits of previous patents that would have been useful to purify and lift the water from the wells and to circulate and purify human blood, without energy costs and batteries to be recharged.

In these solutions, considering that the magnetic flux can be inverted by changing the supply polarity of motors that make the magnets move, we can also align the Lorentz thrusts in the direction of the Newton thrust produced by the turbofans. In addition, by adjusting the thrust force and acceleration by means of variable speed motors that feed the water circulation pumps, turbofans and small motors that circulate the permanent magnets.

The legend of the drawings is reported:

Fig. 1, Modified electric turbofan with Newton and Lorentz thrust:

(1) Electric turbofan; (1.2) variable speed motor controlled by inverter; 1.3 inverter controlled variable speed motor for magnet movement; (1.4) transmission chain complete with permanent magnets; (1.5) open sliding track for chain with permanent magnets; (1.6) closed and magnetically insulated sliding track for chain with permanent magnets; (1.7) air gap; (1.8) solenoid external to the turbofan in a metal housing;

FIg. 2, Plant for the production of compressed hydroelectric primary energy with Lorentz electromagnetic thrust, complete with air and vapor recovery scheme and modified water and compressed air tanks for the production of electromagnetic

thrust:

(1) external water tank at atmospheric pressure; (1.1) level regulator with capacitive probes; (1.2) safety valve with conveyed air discharge; (1.3) variable speed motor with gear wheel for transmission chain; (1.4) transmission chain of permanent magnet transport; (1.5) open sliding track for chain with permanent magnets; (1.6) closed and magnetically insulated sliding track for chain with permanent magnets; (1.7) air gap; (1.8) solenoid external to the external water tank in a metal housing; (2) high pressure tank; (2.1) level regulator with capacitive probes; (2.2) safety valve with conveyed air discharge; (3) pump used as a turbine; (3.1) alternating current generator; (3.2) pump motor coupling joint; (4) suction filter and anti-air bubbles; (5) check valve; (6) pump with double separate power supply up to the impeller; (6.1) double curve with crossed separator partitions in low pressure (lp) and high pressure (hp); (7) variable speed motor controlled by inverter; (8) pump motor coupling joint; (9) air and steam recovery tank; (9.1) safety valve; (9.2) pressure switch; (9.3) water level probe; (9.4) mini electric compressor; (9.5) water drain solenoid valve.

Fig. 3: Plant for the production of compressed hydroelectric primary energy with Lorentz electromagnetic thrust, modified for the tipper versions and the production of the horizontal electromagnetic thrust: it is possible to note the displacement from only one side of the pump used as a turbine (3) and of the generator current (3.1), so that no air bubbles enter the energy circuit, which is also protected by the suction filter and anti air bubbles (4);

Fig. 4 shows in a very schematic way how the transmission of motion occurs to the drive wheels in hydroelectric cars, where the torque is applied to the periphery of each individual wheel rim of the rubber wheel (12), by means of a cylindrical tooth transmission between a crown (12.1) and a spool (11.1). (13 and 14) are the supports of the electric motors (11) front

and rear. These supports are fixed with pivots to the axles and also act as protective casings for the gear transmission. They ensure the same oscillation as the current wheels, carry the flange on which the electric motor (11) is mounted which carries the sprocket (11.1), and are crossed by the shaft (15) with the rotation bearing that carries the brake disc, the flange on which the rim (12) is mounted which is cantilevered by the front axle (16), equipped with an articulated frame to allow steering, or by the rigid rear axle (17).

Fig. 5 shows the longitudinal section of a car equipped with global linear motors and pushed by Newton and Lorentz. This diagram shows the figures concerning the components used to make the Lorentz thrust (FL), the Newton thrust (FN), the driving thrust due to the wheels (FM), the electric motors of the wheels (11), the wheels (12), the support support for the front (13) and rear (14) wheel drive. front axle (16), equipped with an articulated frame to allow minimum turning radii, the rigid rear axle (17), the electric actuator (18) which changes the inclination of the global linear motor placed under the car floor (Fig 1+ Fig 3).

Fig. 6 shows the same figure 5 but in a special version to be supplied to the firefighters, as the current way of putting out fires is incorrect. Aerial firefighting equipment must stop on fire outbreaks, producing normal artificial rain, located on the outbreak, not an inaccurate and violent jet of water that does not hit the target and does not allow the necessary time for water to enter the outbreak. To do this it is necessary to stop, during shutdown, the horizontal thrust of Newton and Lorentz produced by the global linear motor placed under the floor and reinforce the vertical thrust produced inside the passenger compartment. The best solution is to fill the passenger compartment with cylindrical water tanks (11) equipped with sliding tracks for permanent magnets such as the tank (1) and external solenoids (1.8) and accessories (1.3,1.4, 1.5, 1.6, 1.7) powered by primary energy

produced by current generators (3.1) of both global linear motors (inside and outside the passenger compartment). In this way, with the same installed power, we can keep the extinguishing tanks fixed on the fire outbreak by adjusting the induced currents, until the extinguishing water runs out, which comes out of the drain valves (14). Normal flight conditions are restored immediately, with thrusts of Newton and Lorentz.

From the reasoning made on this figure and other similar ones made in the previous patent filing entitled “aerospace and submarine transport system with primary and induced interactive global linear motors”, we must deduce that if we transport inert material or food reserves by air, the weight of these elements can be lightened if inserted in special containers equipped with external sliding of the permanent magnets powered by the primary energy of the transport aircraft, provided that they are equipped with an external solenoid that produce the Lorentz thrust. In the same way, if we transport a car of the future in a container that must reach another planet, or travel in an underwater environment, it is better to put into operation the linear motors that produce the thrust in the desired direction, anchoring to the floor and walls of the container, the car, which will lighten the thrust of the global linear motors of the space or submarine transport vehicle. Obviously, the car of the future designed with suitable seals and sufficient oxygen air supply can also be used to inspect planets and seabed.

Fig. 7 shows the cross section of a car equipped with global linear motors and thrusts of Newton and Lorentz, where you can notice in particular the overlap of the vertical thrust group (Fig. 2) in the center of the passenger compartment and the horizontal one placed below on the platform (Fig.1 + Fig.3) which can oscillate about 20 degrees, Fig 4 with the wheels and the axle; the right (19) and left (20) floating air cushion, which come out of the containers (21) through the

automatic doors (22).

When the car is to be used as a floating vehicle, during the descent phase, the doors (22) are opened by means of two electric actuators and the motorized rotating shaft (23) unrolls the air cushions (19–20), while a special compressor inflates them. Since the floating system consists of two opposite and symmetrical air cushions (19-20) that wrap around the lower part of the car, it will be the same external atmospheric air to crush towards the car The two ends of the air cushions that will fit together between them being shaped with the dovetail shape male female (19.1 -20.1). Therefore, when both cushions are swollen and have reached the surface of the water, the joint between the two cushions will support the weight of the car without separating the cushions. When the car rises from the water to fly into the atmosphere, the deflating air cushions begin to separate, while the empty air cushions wind up on the motorized shafts 23, performing a predetermined number of shaft revolutions and closing of the doors 22.

Today, world authorities are equipping cities with battery-powered car charging points. These charging points are powered by fossil thermal energy. This is all wasted science and technology that does not solve any global environmental, economic problem. Adds new damage to previous ones. With thermal energy you don’t go anywhere, even if we alleviate urban pollution with battery-powered cars, pollution is equally produced outside the cities in greater quantities, because the transport and storage of energy require greater amount of thermal energy produced.

In the meantime, land, sea and air transport continue to pollute with impunity in the name of progress, but for myself, also in the name of scientific ignorance, since science has never deepened interactive research, which would lead to the design of anthropic plants. energy and purification with interactive principles to save resources. In particular,

flying and floating cars without fuels could be an instrument of salvation for humanity in the face of earthquakes, tsunamis, floods, glaciations, which become increasingly frequent, not only because of the pollution produced by man, but also for natural geological phenomena, such as the reversal of the magnetic poles of the earth, of which the undersigned spoke in the article http://www.spawhe.eu/the-lost-civilizations-einstein-s-thought-and-survival -Energy /. With the car flying and floating, the world people could be saved quickly, instead, they have to queue for fuel distributors, who will immediately run out of their goods. In the face of major emergencies, the streets become clogged with cars without fuel and without electricity. They become more a hindrance than an aid.

For many experts, pole reversal is approaching, noting that the speed at which magnetic poles are deviating from geographic ones. The last magnetic reversal occurred about 41,000 years ago, when the magnetic field took about 450 years to move from the North Pole to the South Pole and then return to the starting position.

How can science keep silent about the pollution of land, sea and air transport vehicles, while no world government has financed the experimentation of compressed hydroelectric energy that the undersigned has proposed for over four years, after which in previous years it proposed the version fixed without compressed air?

The pollution that an airplane produces is crazy. Just think that from a small online research on costs and pollution produced by current flight systems (http://www.focus.it/tecnologia/innovazione/quanto-carburante-consuma-un-aereo-di-linea) , with a little approximation, it is estimated that a Jumbo jet on a route of about 6 thousand km (for example Milan-New York), consumes more than 63 thousand liters of kerosene, an average of 19 liters per nautical mile (1 , 8 km), about 158 for each passenger (400 in

total). For each seat, 4,000 kilos of carbon dioxide are also produced. Short routes have proportionately higher fuel consumption because 1/3 of the fuel is burned during take-off. On long flights, however, the proportion drops to 1/8.

Thermal energy is the biggest mistake of world science, which implies more disadvantages than benefits: fuel costs, energy consumption for cooling, the production of toxic gases that to be neutralized, would require purification plants that science has not designed and it also kept silent on the proposed urban global purification. Until proven otherwise, it is not the heat that produces energy, but the pressure produced by the combustion gases, which press on the cylinders of a piston engine, or make a gas turbine turn. This can also be done by the compressed air used statically as the undersigned has shown by purifying the environment and economically saving.

In un sistema di trasporto aereo a reazione, il rendimento di una propulsione aumenta quando più si avvicina la velocità dell'aria che spinge a quella del velivolo che si muove. I due fattori che lo influenzano maggiormente il rendimento dalla spinta sono la velocità W con cui il fluido lascia i propulsori e la velocità di volo del velivolo V: tanto più W è maggiore di V tanto è minore il rendimento propulsivo, che è determinato tramite la relazione: 2 / [1 + (W / V Much higher force is required when the aircraft is stationary.

In fact, a body persists in its state until an external force modifies the state of quiet. As V increases, the propulsive efficiency increases (theoretically it could become equal to 1 (100%) if V could increase up to become equal to W). Taking into consideration that the propulsive efficiency depends on W / V, while the thrust is given by the formula: M * (WV), where M is the mass flow that crosses the turbofans in the unit of time, it is noted that to obtain propulsive efficiency high, therefore with low specific consumption, while keeping the thrust equally high, the mass of air to be accelerated must be privileged over its speed. This is the reason why, the lighter

helicopters also rise vertically while the planes take advantage of the kinetic energy developed by the thermal fan heaters mounted horizontally under the wings and the rolling friction of the take-off carriages to rise towards the atmosphere by floating in the air. In fact, helicopters move much more air than their aircraft to lift. If the planes had more energy at their disposal, they could feed a greater amount of turbofans and would fly up like helicopters or spaceships in science fiction films. Obviously, not even in science fiction films, nobody ever thought that energy could be produced with water and compressed air, nor that jet turbines could be incorporated into electromagnetic thrust solenoids, which not only produce Lorentz thrust, ($\vec{F} = q\vec{v} \times \vec{B}$) which depends on the quantity of electric charges and the speed with which they move, but we also have a local reduction in the weight of the means of transport due to the accelerations of Lorentz and Newton which locally oppose gravity by reducing the weight ($P = ma - a_L - a_N$).

It is obvious that flying cars with interactive global linear motors and thrusts of newton and lorentz, apart from the wheels, which they will rarely use, have nothing to do with current cars, however also the modification of the transmission system of motion to wheels makes it possible to lighten the weight by eliminating the gearbox with relative differential, since the transmission of the wheel revolutions will take place by means of the transmission ratio between the crown wheel, integral with the rim, and the three-phase asynchronous self-braking motor that spins the spool. As an example, with the primary diameter of the crown of about 600 mm and that of the spool of 200 mm we have a reduction ratio of the engine revolutions equal to 3. But what is even more important is the fact that applying the driving force on the primitive diameter of the rim and not on the wheel axle (as it currently is), we multiply the driving torque for the transmission arm, therefore we reduce the force necessary for the transmission of the motion to 1/3 and considering that the

rubberized part of the wheel full load is 10 cm high where the resistant torque is applied, we also improve the acceleration of the means of transport with a low number of revolutions and torque.

If we start from a two-pole electric motor that performs 2840 rpm, the maximum peripheral speed of the wheel will be 946.6 rpm, with the rubber wheel with an external diameter of 0.8 m (circumference 2,512 m), we have a speed maximum hourly speed of 2378 m / minute, equal to 142.6 km / h.

With the current system that has the gearbox connected to the central engine, the transmitted power value is always the same for any gear, both on the engine and on the drive wheels; this is due to the fact that the power is given by the torque for the number of revolutions and the resistant and driving torque are applied on the same rotation axis, whereby the torque increases when the number of revolutions decreases and vice versa. With the electric transmission, regulated with an inverter, the power transmitted is not the same but gradual, moreover, the application of the driving force on a rotation arm that approaches the resistant arm, which is applied on the tire tread, reduces overall the total absorption, both at minimum and maximum rpm.

By making an approximate calculation of the forces that oppose movement on rubber wheels, the following values can be assumed for a vehicle that fully loads 2000 kg:

Rolling resistance on asphalt (20 kg / 1000) = 40 kg;

Aerodynamic drag (Eiffel formula) K * S * V2, where k = 0.0054 for v = 142 km / h S = 2 m2 = Kg 218

Inertia resistance for the supposed acceleration of 1 m / s2 (1000 * 1 / g * 2 t * ka), where ka = 1.2 = kg 244.

Considering the calculated total motion resistance of 502 kg (40 + 218 + 244), we calculate the total power needed for the

translation P = F * v (m / s) / 1000 in kw = 502 * 39.44 / 1000 = 19, 8 KW.

This calculation is in line with the powers of lithium batteries electric cars that car manufacturers are marketing. There is a significant difference with the corresponding thermal engine of the same car model, whose power is about four or five times greater than the battery power. This difference, in part, is due to the fact that for reasons of cost, the performance of electric cars is limited, but is mainly due to the low efficiency of heat engines, which stands at about 35% of the lower calorific value of the fuel. Therefore, it can be said that thermal engines are practical to manufacture but are polluting and with low yields. While electric machines, having little autonomy of service, are impractical and expensive. Instead, we are at year zero for hydroelectric cars that could have the best environmental and energy yields, since, as written above, they do not need fuels and the installed electric power can be reduced significantly, by applying torque to the periphery of the wheel rims and increasing the diameter, decreasing the costs of energy equipment and the size of the hydroelectric plant.

Suppose we build a small pressurized autoclave system that produces energy for the car weighing 2000 kg, hypothesized above by means of an alternating current generator (2.1) coupled to a pump used as a turbine (pat), which is capable of produce the energy calculated above. Which, as written above, applied to the periphery of the wheel rims with a gear transmission and electric motors, is reduced to 1/3 of the calculated one (19.8 / 3) = 6.6 Kw.

Assuming to build an all-wheel drive vehicle, we will apply a two-pole, self-braking two-phase 2.2 kw asynchronous motor to each wheel with a brake operating in direct current. The brake is powered by a rectifier housed inside the terminal box. The rectifier is equipped with surge protection devices. The cooling fan is located in the rear part of the engine. The

salient features of the self-braking motors with direct current brake are the extreme silence during braking, the progressiveness in the starting and stopping phases of the engine. This makes it possible to check the wheels by means of the motors at all times and to avoid overheating of the brake discs, which only intervene in emergencies. The self-braking motors are particularly suitable to be powered by inverters, in our case they are equipped with a double shaft protrusion and with speed detection devices, with angular position of the shaft (encoder), to integrate the functions necessary to the system ABS braking and differential speed in curves, which today are made, certainly with higher costs, separately, on the rotating devices of the wheels and brakesIn fact, small 2.2 kW self-braking motors with a braking torque of about 20 Nm are certainly not able to brake the moving mass of a 2 T transport vehicle, therefore the current braking system must be preserved, but the small decelerations and the small braking can be managed by these motors which allow gradual accelerations and slowdowns. Furthermore, being connected directly to the rotation of each wheel of the vehicle, the ABS control electronics can be transferred to them, as well as the control of the speed of the wheels in curves. In fact, having electronic control sensors scattered in mechanical organs is not very functional. It is certainly better to insert them in electric motors, which can be easily replaced and overhauled. The protection of the power windings can be pushed up to the immersion resistance (IP67) according to the intended use for the vehicle.

To make the hydroelectric plant, the choices can be many, but suppose we take advantage of an air cushion pressure of 360 m of water column and an electric pump used as a turbine with a flow rate of 12.5 L / s. Assuming the efficiency is 0.70, applying the formula Pu = η * Q * Hu / 102, we have an energy production of 30.87 Kw / h (0.70 * 12.5 * 360/102).

By assigning a head of 1.0 m and a efficiency of 0.6 to the

pump with separate double power supply, the power absorbed by the pump, which has a double flow rate than that which passes into the turbine, calculated with the formula 1 * 25/102 * 0, 6 = 0.40 KW. In this case, the ratio of energy spent and output is 77.175 (30.87 / 0.40). In fact, the pressure drops in the valves, in the turbine, the special pieces and the outlet losses, are all absorbed by the dynamic pressures that develop in the pipes that feed the pump under a positive head, on both sides, while in delivery we have appreciable pressure drops, not exceeding the water level (which is incompressible). It is no wonder this result, considering that compressed gases are more powerful, flexible and cheaper energy accumulators than electrical energy accumulators. It can be easily understood that with the help of the compressed air cushion and the small powers required by the valve and pump motors, it is very simple to start the system without any starter motor.

Who will bring the water inside the autoclave is the circuit on the right side of the pump, where the static pressures on the delivery and suction are in balance and therefore the direction of the water flow depends only on the rotation of the impeller. Consequently, also the water coming from the left side is inserted in this flow, not only because the impeller is common, but also because the dividing partitions (hp / lp) of fig. 2 which arrive close to the profile of the impeller, act as moreover, the anti-return valve allows the rotation to enter every quarter of the cross section of the cruise shown in FIG. 2 in succession water in high and low pressure (hp + lp) which having the same direction add up, do not conflict, also in accordance with Pascal’s law which states that the pressure expands in all directions (when it is static). When there is a unidirectional flow, conditioned by the rotation of a pump, the walls of the pipes and check valves the dynamic pressure is forced to expand in the direction of the flow.

Suppose that both alternating current generators (3.1) coupled to a pump used as a turbine (pat), which exploit the useful height Hu = 360 m and a double-powered electric pump with a flow rate of 12.5 L / s, produce 30.87 Kw / he that the ratio between the energy spent and rendered as written above is 77.175, if we divide this value by the average efficiency of the thermal energy (0.35) we have the convenience ratio between a compressed hydroelectric engine and a heat engine, which equal to 220.5 (77.175 / 0.35). This means that an interactive primary engine not only does not produce pollution, it does not require the purchase of fuels and fuel tanks, and also 220.5 times more convenient from an energy point of view. Therefore, with two current generators that produce 30.87 + 30.87 kw / h to be distributed to the electric motors that feed the drive wheels of fig. 4 (used only in the take-off phase), to the engine they feed, the electric turbofan of figure 1 and to the small engines that move the permanent magnets that produce the Lorentz thrust in the three induced solenoids of fig. 1 and 2 shown in sections fig. 5, 6, 7, will be able to easily fly a medium sized car, such as the one indicated in these drawings. Prototypes will establish scientific truth. Even if we were to double or triple the installed powers for safety reasons, considering that the installed powers do not require the purchase of fuels and do not require investments in roads, viaducts, railways, tunnels and medical expenses to treat the lung diseases that produces the thermal pollution, there should be no doubt about what means of transport and work of the future should be.

The undersigned who has worked for seventeen years in the automotive industry, knows the potential of the organization of industrial work and it is certain that if we change energy sources, in a short time we could restore the environment and create sustainable development. The large series production that allows the transport sector has already worked wonders by creating quality technological components. The only problems he could not solve were the zeroing of CO2, the reduction of

fine particles, and the costs that the fuels they entail. The modified compressed hydroelectric motor that produces clean primary energy and the electromagnetic induction that produces current generators and electric motors and the induced currents, which allow to produce the thrusts of Newton and Lorentz, avoiding thermal transformations, these very serious problems they avoided virtually, as they could have been avoided since the origins of the industrial age if science had reasoned globally. Without being divided into many sectors that have produced more disasters than benefits.

http: ///www.spawhe.eu FLYING AND FLOATING CARS WITH INTERACTIVE GLOBAL LINEAR MOTORS, THRUST OF NEWTON AND LORENTZ.

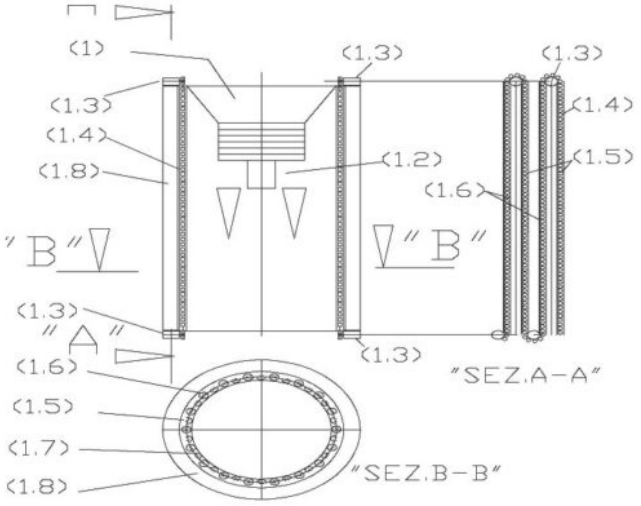

Fig. 1, Modified electric turbofan with Newton and Lorentz thrust:

(1) Electric turbofan; (1.2) variable speed motor controlled by inverter; 1.3 inverter controlled variable speed motor for magnet movement; (1.4) transmission chain complete with permanent magnets; (1.5) open sliding track for chain with permanent magnets; (1.6) closed and magnetically insulated sliding track for chain with permanent magnets; (1.7) air gap; (1.8) solenoid external to the turbofan in a metal housing;

http: ///www.spawhe.eu FLYING AND FLOATING CARS WITH INTERACTIVE GLOBAL LINEAR MOTORS, THRUST OF NEWTON AND LORENTZ.

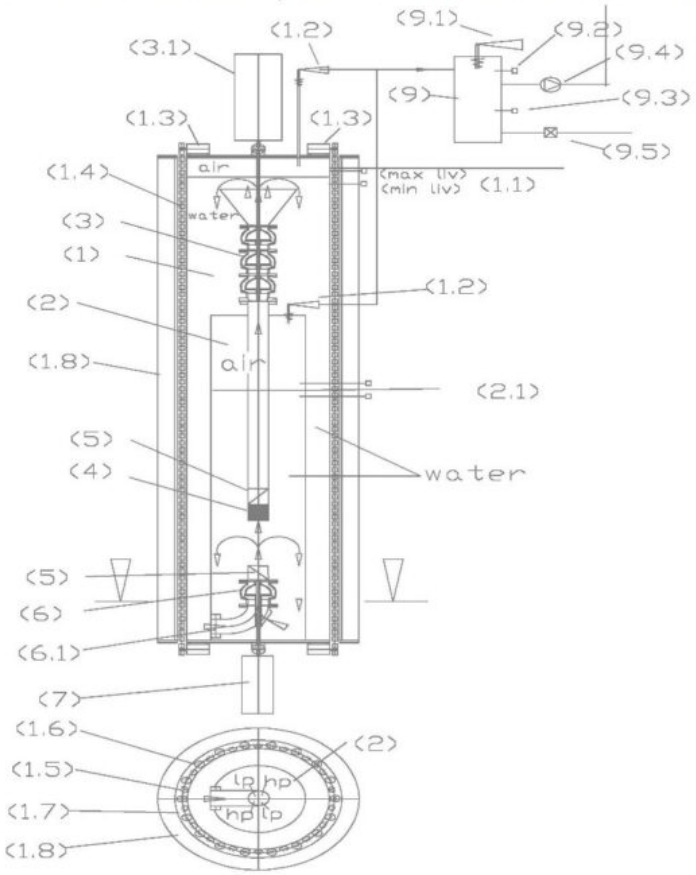

FIG. 2, MODIFIED COMPRESSED HYDROELECTRIC PLANT FOR THE PRODUCTION OF THE LORENTZ THRUST

(1) external water tank at atmospheric pressure; (1.1) level regulator with capacitive probes; (1.2) safety valve with conveyed air discharge; (1.3) variable speed motor with gear wheel for transmission chain; (1.4) transmission chain of permanent magnet transport; (1.5) open sliding track for chain with permanent magnets; (1.6) closed and magnetically insulated sliding track for chain with permanent magnets; (1.7) air gap; (1.8) solenoid external to the external water tank in a metal housing; (2) high pressure tank; (2.1) level regulator with capacitive probes; (2.2) safety valve with conveyed air discharge; (3) pump used as a turbine; (3.1) alternating current generator; (3.2) pump motor coupling joint; (4) suction filter and anti air bubbles; (5) check valve; (6) pump with double separate feeding up to the impeller; (6.1) double curve with crossed separating partitions in low pressure (lp) and high pressure (hp); (7) variable speed motor controlled by inverter; (8) pump motor coupling joint; (9) air and steam recovery tank; (9.1) safety valve; (9.2) pressure switch; (9.3) water level probe; (9.4) mini electric compressor; (9.5) water drain solenoid valve.

http: ///www.spawhe.eu FLYING AND FLOATING CARS WITH INTERACTIVE GLOBAL LINEAR MOTORS, THRUST OF NEWTON AND LORENTZ.

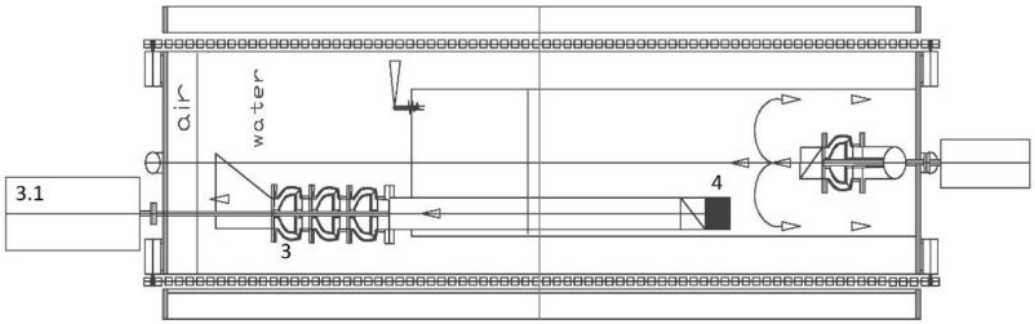

Fig. 3: Plant for the production of compressed hydroelectric primary energy with Lorentz electromagnetic thrust, modified for the tipper versions and the production of the horizontal electromagnetic thrust: it is possible to note the displacement from only one side of the pump used as a turbine (3) and of the generator current (3.1), so that no air bubbles enter the energy circuit, which is also protected by the suction filter and anti air bubbles (4);

http: ///www.spawhe.eu FLYING AND FLOATING CARS WITH INTERACTIVE GLOBAL LINEAR MOTORS, THRUST OF NEWTON AND LORENTZ.

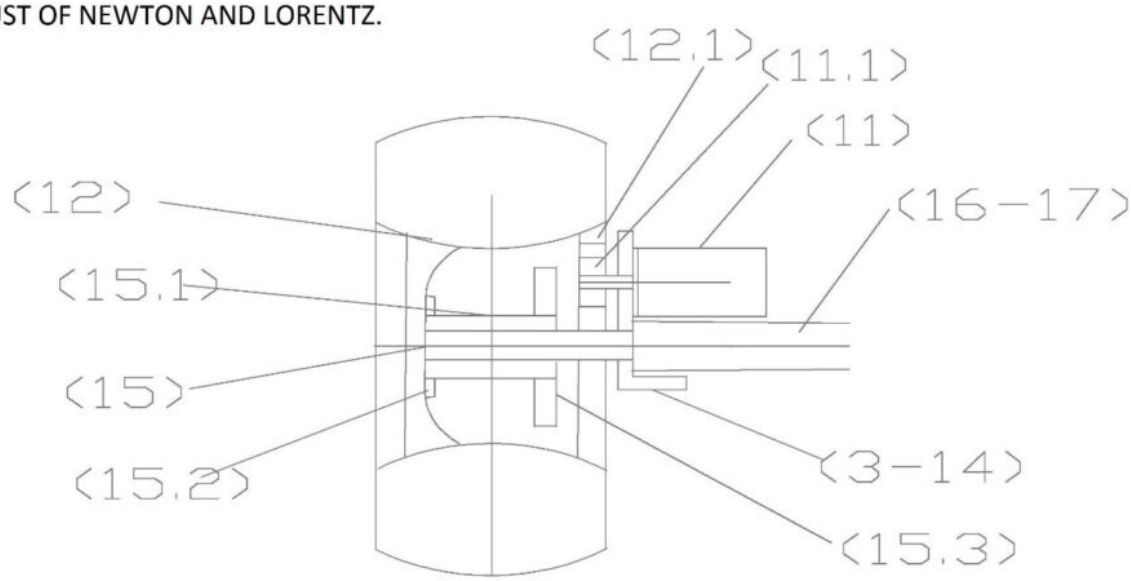

Fig. 4 shows in a very schematic way how the transmission of motion takes place to the drive wheels in hydroelectric cars, where the torque is applied to the periphery of eachindividual wheel rim of the rubber wheel (12), by means of a cylindrical tooth transmission between a crown (12.1) and a spool (11.1). (13 and 14) are the supports of the electric motors (11) front and rear. These supports are fixed with pivots to the axles and also act as protective casings for the gear transmission. They ensure the same oscillation as the current wheels, carry the flange on which the electric motor (11) is mounted which carries the sprocket (11.1), and are crossed by the shaft (15) with the rotation bearing that carries the brake disc, the flange on which the rim (12) is mounted which is cantilevered by the front axle (16), equipped with an articulated frame to allow steering, or by the rigid rear axle (17).

http: ///www.spawhe.eu FLYING AND FLOATING CARS WITH INTERACTIVE GLOBAL LINEAR MOTORS, THRUST OF NEWTON AND LORENTZ.

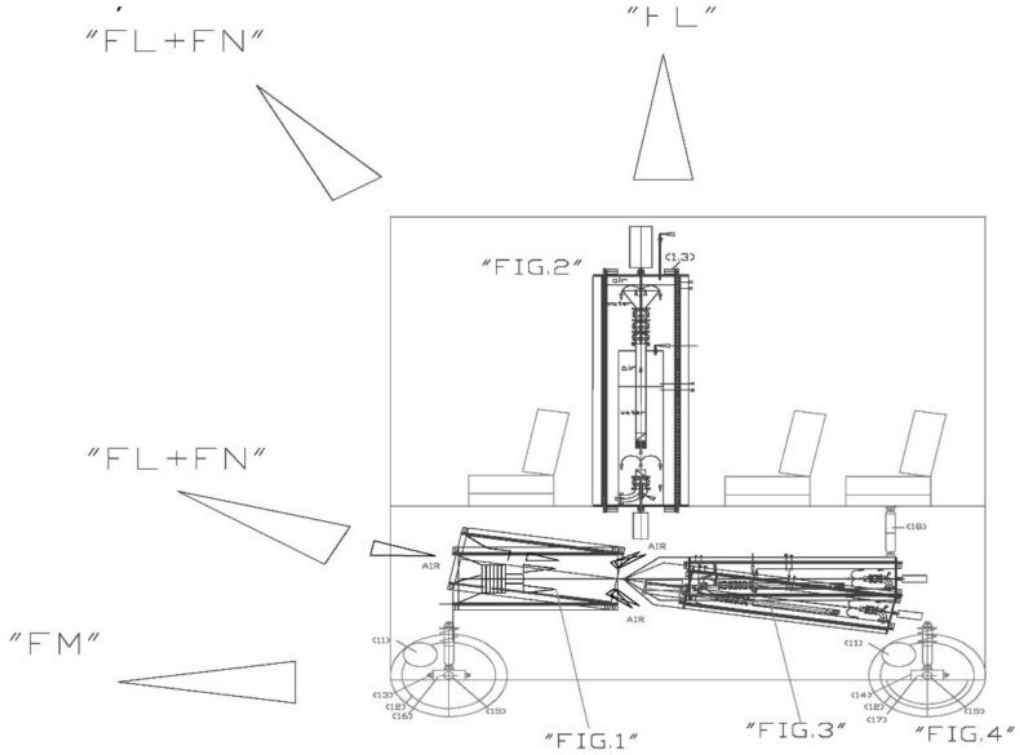

FIG.5

Lorentz thrust (FL), Newton thrust (FN), drive thrust due to the wheels (FM), electric wheel motors (11), wheels (12), support support for the front wheel drive (13) and rear (14), front axle (16) equipped with an articulated frame to allow minimum turning radii, rigid rear axle (17), electric actuator (18) that changes the inclination of the global linear motor placed under the floor of the car (FIg 1+ Fig3)

http: ///www.spawhe.eu FLYING AND FLOATING CARS WITH INTERACTIVE GLOBAL LINEAR MOTORS, THRUST OF NEWTON AND LORENTZ.

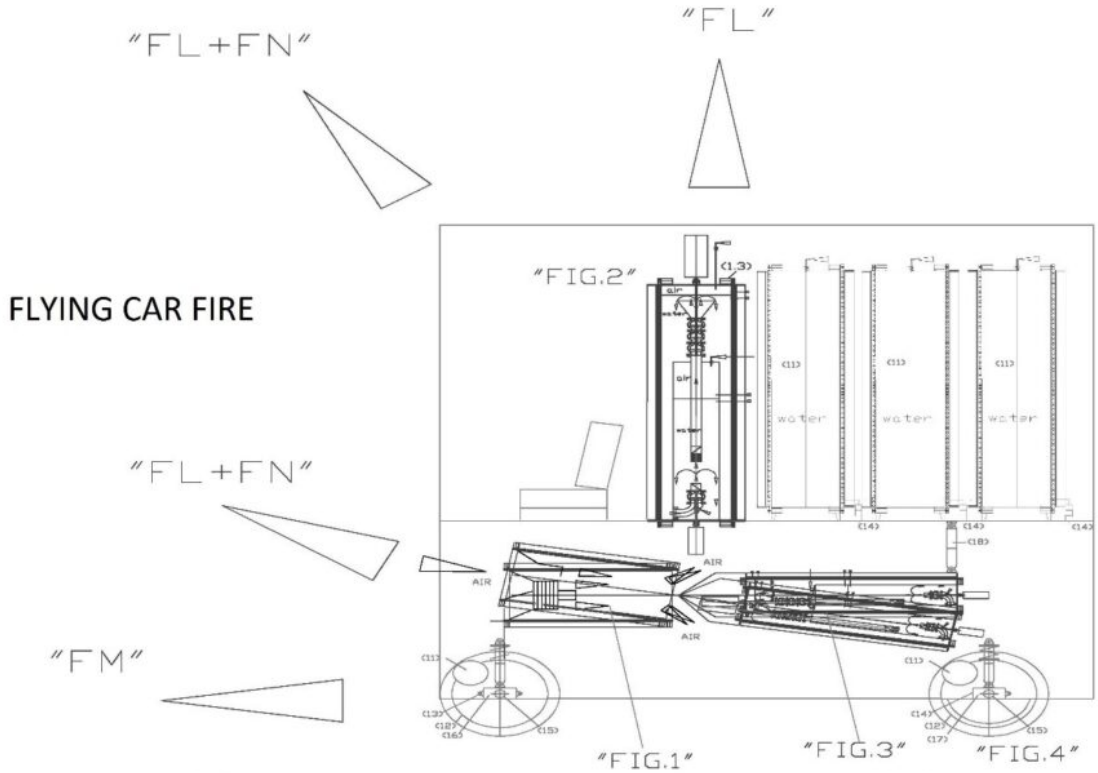

FIG. 6: Lorentz thrust (FL), Newton thrust (FN), drive thrust due to the wheels (FM), electric wheel motors (11), wheels (12), support support for the front wheel drive (13) and rear (14), front axle (16) equipped with an articulated frame to allow minimum turning radii, rigid rear axle (17), electric actuator (18) that changes the inclination of the global linear motor placed under the floor of the car (Fig 1+ Fig 3) cylindrical water tanks (11) equipped with sliding tracks for the permanent magnets and external solenoids (1.8) and accessories (1.3,1.4, 1.5. 1.6,1.7) powered by the primary energy produced by the current generators (3.1) of both global linear motors (inside and outside the passenger compartment).

http: ///www.spawhe.eu FLYING AND FLOATING CARS WITH INTERACTIVE GLOBAL LINEAR MOTORS, THRUST OF NEWTON AND LORENTZ.

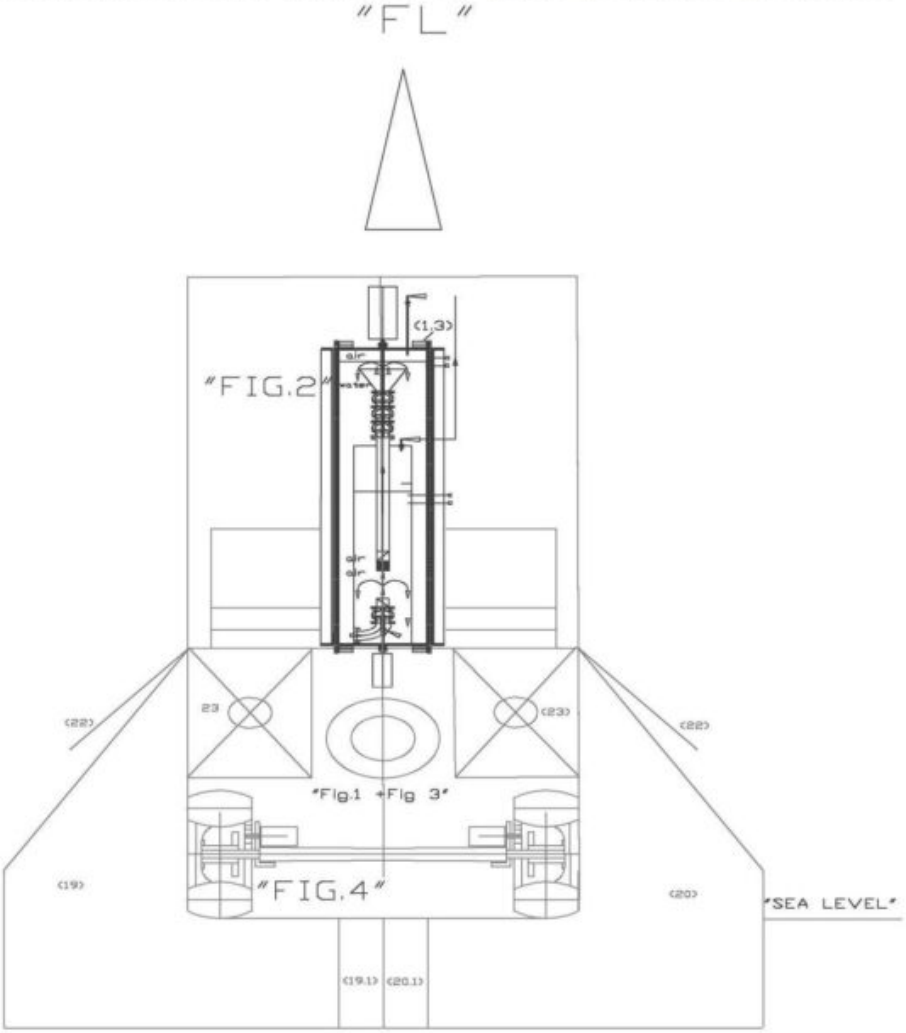

Fig. 7 shows the cross section of a car equipped with global linear motors and thrusts of Newton and Lorentz, where you can notice in particular the overlap of the vertical thrust group (Fig. 2) in the center of the passenger compartment and the horizontal one placed below on the platform (Fig.1 + Fig.3) which can oscillate about 20 degrees, Fig 4 with the wheels and the axle; the right (19) and left (20) floating air cushion, which come out of the containers (21) through the automatic doors (22). When the car is to be used as a floating vehicle, during the descent phase, the doors (22) are opened by means of two electric actuators and the motorized rotating shaft (23) unrolls the air cushions (19–20), while a special compressor inflates them. Since the floating system consists of two opposite and symmetrical air cushions (19-20) that wrap around the lower part of the car, it will be the same external atmospheric air to crush towards the car The two ends of the air cushions that will fit together between them being shaped with the dovetail shape male female (19.1 -20.1). Therefore, when both cushions are swollen and have reached the surface of the water, the joint between the two cushions will support the weight of the car without separating the cushions. When the car rises from the water to fly into the atmosphere, the deflating air cushions begin to separate, while the empty air cushions wind up on the motorized shafts 23, performing a predetermined number of shaft revolutions and closing of the doors 22.